三力信®
Sanlixin®

SOLENOID VALVE

National High-tech Enterprise



YUYAO SANLIXIN SOLENOID VALVE CO.,LTD.

About Sanlixin

Brief Introduction

Yuyao Sanlixin Solenoid Valve Co., Ltd. specializes in the design and manufacture of all kinds of fluid solenoid valves and other automatic control valves, high-tech enterprises, specialized "little giant" enterprises, well-known firms in Zhejiang Province, It has more than 80 patents for invention and utility models of solenoid valves. It has cooperated with University of Zhejiang for professional research, and has Sanlixin Product R&D Center of Zhejiang University Huanjiang Laboratory. Ningbo Sanlixin Industrial Solenoid Valve Engineering (Technology) Center.

Since 1993. it has more than 100 series, 10,000 kinds of specifications types widely used in a variety of media in the pipeline automatic control. Product flow diameter from DN0.1 to DN150mm, operating pressure from vacuum to 1050 bar, body and seal available in a variety of materials. The company has been committed to the development of new products, with water, gas, high pressure, high temperature and other media and pressure of all kinds of solenoid valve test engineering system. The company has passed ISO9001 quality management system certification, ISO14000 environmental management system certification, ISO45000 Occupational health and safety management system certification and intellectual property management system certification. Some products have passed the European TÜV, CE WRAS NSF UL certification, etc. China Ex explosion-proof 3C certification.

The company has basically established the Sanlixin product marketing network in the world, established 13 sales centers in China and established sales centers in 10 countries overseas. The company engineers can provide you with pre-sales and after-sales service, and can design and customize all kinds of fluid solenoid valve products professionally.

The company adheres to the business purpose of "technology first, quality oriented, customer oriented, create excellent brand", constantly meet customer requirements, seek common development, and serve global users.

HIGH QUALITY ***BEST SERVICE***

Enterprise Honor







三力信 Sanlixin

New factory covering 32000 square meters



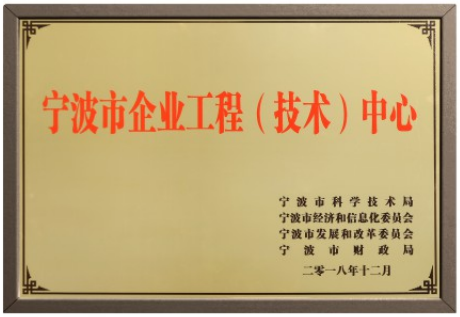





三力信 Sanlixin

Patent Certificate & Quality certificate

Sanlixin Solenoid Valve


证书号第2596672号

发明专利证书

发明名称：安全的检测蒸汽电磁阀的方法

发明人：毛杉海;顾国云

专利号：ZL 2014 1 0720908.0

专利申请日：2014年12月03日

专利权人：余姚市三力信电磁阀有限公司

授权公告日：2017年08月25日

局长 申长雨


证书号第3073911号

发明专利证书

发明名称：一种检测水气电磁阀综合性能的方法

发明人：毛杉海;顾国云

专利号：ZL 2016 1 0109350.0

专利申请日：2016年02月26日

专利权人：余姚市三力信电磁阀有限公司

地址：315400 浙江省宁波市余姚市虹桥路9号

授权公告日：2018年09月18日 授权公告号：CN 105606355 B

局长 申长雨


证书号第3079081号

发明专利证书

发明名称：一种安全的检测高压电磁阀的方法

发明人：毛杉海;顾国云

专利号：ZL 2016 1 0156379.4

专利申请日：2016年03月17日

专利权人：余姚市三力信电磁阀有限公司

地址：315400 浙江省宁波市余姚市虹桥路9号

授权公告日：2018年09月18日 授权公告号：CN 105571794 B

局长 申长雨


NSF International

789 N. Dixboro Road, Ann Arbor, MI 48105 USA

RECOGNIZES

Yuyao Sanlixin Solenoid Valve Co., Ltd.

Facility: Zhejiang, China

AS COMPLYING WITH NSF/ANSI 61, 372 AND ALL APPLICABLE REQUIREMENTS.
PRODUCTS APPEARING IN THE NSF OFFICIAL LISTING ARE
AUTHORIZED TO BEAR THE NSF MARK.

September 22, 2017
Certificate# C0330751 - 01

David Purkiss
General Manager, Plumbing


NSF International

789 N. Dixboro Road, Ann Arbor, MI 48105 USA

RECOGNIZES

Yuyao Sanlixin Solenoid Valve Co., Ltd.

China

AS COMPLYING WITH NSF/ANSI 61, 372 AND ALL APPLICABLE REQUIREMENTS.
PRODUCTS APPEARING IN THE NSF OFFICIAL LISTING ARE
AUTHORIZED TO BEAR THE NSF MARK.

September 22, 2017
Certificate# C0330750 - 01

David Purkiss
General Manager, Plumbing


CERTIFICATE OF COMPLIANCE

Certificate Number 20190730-MH63799
Report Reference MH63799-20190730
Issue Date 2019-JULY-30

Issued to: Yuyao Sanlixin Solenoid Valve Co Ltd
No 9 Hongqiao Rd, Yuyao
Ningbo
Zhejiang 315400 China

This certificate confirms that representative samples of: Component - Valve Parts, Electrically Operated Coil Assembly, Series D04, Type Numbers: D04-3101U, D04-3102U, D04-3104U, D04-3106U, D04-3107U, D04-31011U and D04-31013U.

Have been investigated by UL in accordance with the component requirements in the Standard(s) indicated on this Certificate. UL Recognized components are incomplete in certain constructional features or restricted in performance capabilities and are intended for installation in complete equipment submitted for investigation to UL LLC.

Standard(s) for Safety: UL 429, Electrically Operated Valves
Additional Information: See the UL Online Certifications Directory at https://iq.ulprospector.com for additional information.

This Certificate of Compliance does not provide authorization to apply the UL Recognized Component Mark. Only the UL Follow-Up Services Procedure provides authorization to apply the UL Mark.

Only those products bearing the UL Recognized Component Mark should be considered as being UL Certified and covered under UL's Follow-Up Services.

Look for the UL Recognized Component Mark on the product.

Page 1 of 1


WRAS

WRAS PRODUCT APPROVAL CERTIFICATE

Approval Number
260512701

Field of application: Products complying with the Water Supply (Water Fittings) Regulations 1999 (England & Wales), the Water Supply (Water Fittings) (Scotland) Byelaws 2014 and the Water Supply (Water Fittings) Regulations (Northern Ireland) 2009.

Approval holder: Yuyao Sanlixin Solenoid Valve Co., Ltd.

WRAS directory section: 2230

Product type: Valves
Solenoid, metal.

Model: "WSLP2DF-XX-E1-XX-03-X
WSLP2DF-XX-E1-XX-XX-X
WZS1DF-XX-E5-XX-XX-X &
WZS1DF-XX-E1-XX-XX-X
SOLENOID VALVES.

(FOR MODELS AND SIZES COVERED BY THE SCOPE OF THIS APPROVAL PLEASE CONSULT THE WRAS ONLINE DIRECTORY AND/OR ACCOMPANYING WRAS APPROVAL LETTER)

Basis of compliance: Tested to regulations Specification Test Code Sheets

Valid from: 1st May 2026

Date of expiry: 31st May 2031

Authorised by: Ian Hughes, WRAS Approvals Manager

Certificate issued: 10th March 2026


中国国家强制性产品认证证书

编号：2020312307000034

委托人 余姚市三力信电磁阀有限公司
地址 余姚市虹桥路9号
生产者 余姚市三力信电磁阀有限公司
地址 余姚市虹桥路9号
生产企业 余姚市三力信电磁阀有限公司
生产地址 浙江省余姚市虹桥路9号
产品名称 防爆线圈
型号规格 XI-220
防爆标志 Ex mb IIC T4 Gb
依据标准 GB3836.1-2010，GB3836.9-2014

认证模式 型式试验+初始工厂检查+获证后监督

上述产品符合 CNCA-C23-01：2019《强制性产品认证实施规则 防爆电气》和 CNEX-C2301-2019《强制性产品认证实施细则 防爆电气》的要求。

产品相关信息见附页（共1页）。

颁发日期 2020 年 04 月 17 日 有效期至 2025 年 04 月 16 日

证书有效期内本证书的有效性依据发证机构的定期监督获得保持。

主任：

CNEX 南阳防爆电气研究所有限公司

网址：www.ccc-cnex.com ccc.china-ex.com 地址：中国河南省南阳市仲景北路20号 电话：0377-63239734 邮政编码：473008 邮箱：ccc@cn-ex.com

CN 0004253



证书号第4902248号

发明专利证书

发明名称：一种用于电磁阀的电磁线圈结构

发明人：毛杉海;邵杰;鲁焕炯;顾国云

专利号：ZL 2021 1 1170274.1

专利申请日：2021年10月08日

专利权人：余姚市三力信电磁阀有限公司

地址：315400 浙江省宁波市余姚市虹桥路9号

授权公告日：2022年01月25日　　授权公告号：CN 113611478 B

国家知识产权局依照中华人民共和国专利法进行审查，决定授予专利权，颁发发明专利证书并在专利登记簿上予以登记。专利权自授权公告之日起生效。专利权期限为二十年，自申请日起算。

专利证书记载专利权登记时的法律状况。专利权的转移、质押、无效、终止、恢复和专利权人的姓名或名称、国籍、地址发生等事项记载在专利登记簿上。

局长
申长雨

2022年01月25日

第1页(共2页)



证书号第4796429号

发明专利证书

发明名称：一种深海用同轴电磁阀及使用方法

发明人：毛杉海;魏荣锐;顾国云

专利号：ZL 2021 1 1043502.9

专利申请日：2021年09月07日

专利权人：余姚市三力信电磁阀有限公司

地址：315400 浙江省宁波市余姚市虹桥路9号

授权公告日：2021年11月16日　　授权公告号：CN 113483142 B

国家知识产权局依照中华人民共和国专利法进行审查，决定授予专利权，颁发发明专利证书并在专利登记簿上予以登记。专利权自授权公告之日起生效。专利权期限为二十年，自申请日起算。

专利证书记载专利权登记时的法律状况。专利权的转移、质押、无效、终止、恢复和专利权人的姓名或名称、国籍、地址发生等事项记载在专利登记簿上。

局长
申长雨

第1页(共2页)



中宏认证

质量管理体系认证证书

经北京中安质环认证中心有限公司审核，确认

余姚市三力信电磁阀有限公司

统一社会信用代码：91330281720489027D

（注册地址：浙江省余姚市虹桥路9号　　邮编：315400）

质量管理体系符合：

GB/T 19001-2016/ISO 9001:2015

本质量管理体系覆盖下列产品：

电磁阀产品的设计、生产和服务

地址：浙江省余姚市虹桥路9号。

注册号：02820321001307R

有效期：2023年12月12日至2026年12月21日

颁证日期：2023年12月12日

北京中安质环认证中心有限公司

（原名：中国质环认证中心）

（地址：北京市朝阳区东三环南路58号富顿中心1号楼22层　邮编：100022）

签发人：

任磊

IAF　CNAS



TÜV NORD

Certificate
of conformity with the following
European Directive

Registered No.:
44 799 14 406748 - 026

Low-Voltage Directive 2014/35/EU

This is to certify that the following products comply to the essential requirements (Annex I) of the above mentioned European Directive and the following standards, taking into account the German national deviations:

Product: Solenoid valve

Type designation: SLP series

Applicant: YUYAO SANLIXIN SOLENOID VALVE CO., LTD.
No.9 Hongqiao Road, Yuyao, Zhejiang, China

Standard(s): EN 60730-1:2016

This certificate of conformity is based on the evaluation of samples of the product. It does not imply an assessment of the production and it does not permit the use of a mark of conformity or of a safety mark of the TÜV NORD CERT GmbH. The holder of this certificate may use it together with his EU Declaration of Conformity.

Certification Body
Specialist Manager Cosumer Products

TÜV NORD CERT GmbH
Langemarckstrasse 20
D-45141 Essen
P.O.Box 10 32 61
D-45032 Essen
Fax: +49 (0)201 825-3200
Email: prodsert@tuev-nord.de

CE The CE marking may be affixed on the product if all relevant and effective Directives are complied with. CE



TÜV NORD

Certificate
of conformity with the following
European Directive

Registered No.:
44 799 14 406748 - 029

Low-Voltage Directive 2014/35/EU

This is to certify that the following products comply to the essential requirements (Annex I) of the above mentioned European Directive and the following standards, taking into account the German national deviations:

Product: Solenoid valve

Type designation: SLA series

Applicant: YUYAO SANLIXIN SOLENOID VALVE CO., LTD.
No.9 Hongqiao Road, Yuyao, Zhejiang, China

Standard(s): EN 60730-1:2016

This certificate of conformity is based on the evaluation of samples of the product. It does not imply an assessment of the production and it does not permit the use of a mark of conformity or of a safety mark of the TÜV NORD CERT GmbH. The holder of this certificate may use it together with his EU Declaration of Conformity.

Certification Body
Specialist Manager Cosumer Products

TÜV NORD CERT GmbH
Langemarckstrasse 20
D-45141 Essen
P.O.Box 10 32 61
D-45032 Essen
Fax: +49 (0)201 825-3200
Email: prodsert@tuev-nord.de

CE The CE marking may be affixed on the product if all relevant and effective Directives are complied with. CE



证书号第5541406号

实用新型专利证书

实用新型名称：一种大口径先导式二位三通电磁阀

发明人：毛杉海;顾国云;鲁焕炯

专利号：ZL 2016 2 0164880.4

专利申请日：2016年03月03日

专利权人：余姚市三力信电磁阀有限公司

授权公告日：2016年09月07日

本实用新型提出本局依照中华人民共和国专利法进行初步审查，决定授予专利权，颁发本证书并在专利登记簿上予以登记。专利权自授权公告之日起生效。

本专利的专利权期限为十年，自申请日起算。专利权人应当依照专利法及其实施细则规定缴纳年费，本专利的年费应当在每年03月03日前缴纳。未按照规定缴纳年费的，专利权自应当缴纳年费期满之日起终止。

专利证书记载专利权登记时的法律状况。专利权的转移、质押、无效、终止、恢复和专利权人的姓名或名称、国籍、地址发生等事项记载在专利登记簿上。

局长
申长雨

第1页(共1页)



证书号第5541406号

实用新型专利证书

实用新型名称：一种大口径先导式二位三通电磁阀

发明人：毛杉海;顾国云;鲁焕炯

专利号：ZL 2016 2 0164880.4

专利申请日：2016年03月03日

专利权人：余姚市三力信电磁阀有限公司

授权公告日：2016年09月07日

本实用新型提出本局依照中华人民共和国专利法进行初步审查，决定授予专利权，颁发本证书并在专利登记簿上予以登记。专利权自授权公告之日起生效。

本专利的专利权期限为十年，自申请日起算。专利权人应当依照专利法及其实施细则规定缴纳年费，本专利的年费应当在每年03月03日前缴纳。未按照规定缴纳年费的，专利权自应当缴纳年费期满之日起终止。

专利证书记载专利权登记时的法律状况。专利权的转移、质押、无效、终止、恢复和专利权人的姓名或名称、国籍、地址发生等事项记载在专利登记簿上。

局长
申长雨

第1页(共1页)



证书号第5541406号

实用新型专利证书

实用新型名称：一种大口径先导式二位三通电磁阀

发明人：毛杉海;顾国云;鲁焕炯

专利号：ZL 2016 2 0164880.4

专利申请日：2016年03月03日

专利权人：余姚市三力信电磁阀有限公司

授权公告日：2016年09月07日

本实用新型提出本局依照中华人民共和国专利法进行初步审查，决定授予专利权，颁发本证书并在专利登记簿上予以登记。专利权自授权公告之日起生效。

本专利的专利权期限为十年，自申请日起算。专利权人应当依照专利法及其实施细则规定缴纳年费，本专利的年费应当在每年03月03日前缴纳。未按照规定缴纳年费的，专利权自应当缴纳年费期满之日起终止。

专利证书记载专利权登记时的法律状况。专利权的转移、质押、无效、终止、恢复和专利权人的姓名或名称、国籍、地址发生等事项记载在专利登记簿上。

局长
申长雨

第1页(共1页)



证书号第5541406号

实用新型专利证书

实用新型名称：一种大口径先导式二位三通电磁阀

发明人：毛杉海;顾国云;鲁焕炯

专利号：ZL 2016 2 0164880.4

专利申请日：2016年03月03日

专利权人：余姚市三力信电磁阀有限公司

授权公告日：2016年09月07日

本实用新型提出本局依照中华人民共和国专利法进行初步审查，决定授予专利权，颁发本证书并在专利登记簿上予以登记。专利权自授权公告之日起生效。

本专利的专利权期限为十年，自申请日起算。专利权人应当依照专利法及其实施细则规定缴纳年费，本专利的年费应当在每年03月03日前缴纳。未按照规定缴纳年费的，专利权自应当缴纳年费期满之日起终止。

专利证书记载专利权登记时的法律状况。专利权的转移、质押、无效、终止、恢复和专利权人的姓名或名称、国籍、地址发生等事项记载在专利登记簿上。

局长
申长雨

第1页(共1页)

三力信 Sanlixin®

Sanlixin Solenoid Valve

NZS Solenoid Valves Numbering System For Order 1



NZS Compact Series 2/2-Way Direct Acting Solenoid Valve 2-3
<Normally Closed>
Body material: Brass (Lead free copper) Pressure: 0~115PSI
Orifice: ϕ4~10mm Pipe size: 3/8"-1/2"



NZS 2/2-Way Direct Acting Solenoid Valve 4
<Normally Closed>
Body material: Brass (Lead free copper) Pressure: 0~290PSI
Orifice: ϕ10~20mm Pipe size: 3/8"-1"



NZS 2/2-Way Large Diameter Direct Acting Solenoid Valve 5
<Normally Closed>
Body material: Brass (Lead free copper) Pressure: 0~145PSI
Orifice: ϕ16~50mm Pipe size: 3/8"-2"



NZS 2/2-Way Direct Acting Solenoid Valve 6
<Normally Open>
Body material: Brass (Lead free copper) Pressure: 0~190PSI
Orifice: ϕ10~20mm Pipe size: 3/8"-1"



NZS 2/2-Way Large Diameter Direct Acting Solenoid Valve 7
<Normally Open>
Body material: Brass (Lead free copper) Pressure: 0~75PSI
Orifice: ϕ16~50mm Pipe size: 3/8"-2"

NSLP Solenoid Valves Numbering System For Order 8



NSLP Compact Series 2/2-Way Direct Acting Solenoid Valve 9-10
<Normally Closed>
Body material: Brass (Lead free copper) Pressure: 0~435PSI
Orifice: ϕ1~6mm Pipe size: 1/8"-1/2"



NSLP Compact Series 2/2-Way Direct Acting Solenoid Valve 11
<Normally Open>

Body material：Brass (Lead free copper)　Pressure：0~435PSI
Orifice：ϕ1~4mm　Pipe size：1/8"–1/4"



NSLP Small Series 2/2-Way Pilot Operated Solenoid Valve 12
<Normally Closed>

Body material：Brass (Lead free copper)　Pressure：1.5~230PSI
Orifice：ϕ10.5mm　Pipe size：1/4"-1/2"



NSLP Small Series 2/2-Way Direct Acting Solenoid Valve 13
<Normally Closed>

Body material：Brass (Lead free copper)　Pressure：0~230PSI
Orifice：ϕ10.5mm　Pipe size：1/4"-1/2"



NSLP 2/2-Way Large Diameter Pilot Operated Solenoid Valve 14
<Normally Closed>

Body material：Brass (Lead free copper)　Pressure：5~230PSI
Orifice：ϕ13-50mm　Pipe size：3/8"-2"



NSLP Small Series 2/2-Way Pilot Operated Solenoid Valve 15
<Normally Open>

Body material：Brass (Lead free copper)　Pressure：1.5~230PSI
Orifice：ϕ10.5mm　Pipe size：1/4"-1/2"



NSLP 2/2-Way Large Diameter Pilot Operated Solenoid Valve 16
<Normally Open>

Body material：Brass (Lead free copper)　Pressure：5~190PSI
Orifice：ϕ13-50mm　Pipe size：3/8"-2"

D04-310U Series coil 17

UZS Series Solenoid Valves Model Numbering System for Order 18



UZS Series 2/2-Way Direct Acting Solenoid Valve 19-20

<Normally Closed>

Body material：forged brass　　Pressure：0~290PSI

Orifice：ϕ10-20mm　　Pipe size：1/4"-1"



UZS Series 2/2-Way Direct Acting Solenoid Valve 21-22

<Normally Closed>

Body material：SS304　　Pressure：0~290PSI

Orifice：ϕ10-20mm　　Pipe size：1/4"-1"



UZS Series 2/2-Way Large Diameter Direct Acting Solenoid Valve 23-24

<Normally Closed>

Body material：forged brass　　Pressure：0~115PSI

Orifice：ϕ16-25mm　　Pipe size：3/8"-1"



UZS Series 2/2-Way Large Diameter Direct Acting Solenoid Valve 25-26

<Normally Closed>

Body material：SS304　　Pressure：0~115PSI

Orifice：ϕ16-25mm　　Pipe size：3/8"-1"



UZS Series 2/2-Way Large Diameter Direct Acting Solenoid Valve 27

<Normally Closed>

Body material：SS304　　Pressure：0~115PSI

Orifice：ϕ15-25mm　　Pipe size：Flange connection



UZS Plastic Series 2/2-Way Zero Press Differential Solenoid Valve 28

<Normally Closed>

Body material：Nylon(PA6)　　Pressure：0~115PSI

Orifice：ϕ15-25mm　　Pipe size：1/2"-1"

USLP Series Solenoid Valves Model Numbering System for Order 29



USLP Series Compact Series 2/2-Way Direct Acting Solenoid Valve 30-31

<Normally Closed>

Body material: forged brass、SS316 Pressure: 0~190PSI

Orifice: ϕ3-6mm Pipe size: 1/8"-1/2"



USLP Small Series 2/2-Way Direct Acting Solenoid Valve 32

<Normally Closed>

Body material: forged brass、SS316 Pressure: 0~190PSI

Orifice: ϕ3-4mm Pipe size: 3/8"



USLP Compact Series 2/2-Way Direct Acting Solenoid Valve 33-34

<Normally Open>

Body material: forged brass、SS316 Pressure: 0~435PSI

Orifice: ϕ1-4mm Pipe size: 1/8"-1/4"



USLP Small Series 2/2-Way Pilot Operated Solenoid Valve 35

<Normally Closed>

Body material: forged brass Pressure: 1.5~230PSI

Orifice: ϕ10.5mm Pipe size: 1/4"-1/2"



USLP Small Series 2/2-Way Pilot Operated Solenoid Valve 36

<Normally Closed>

Body material: SS316 Pressure: 1.5~230PSI

Orifice: ϕ9mm Pipe size: 1/4"-1/2"



USLP Small Series 2/2-Way Direct Acting Solenoid Valve 37

<Normally Closed>

Body material: forged brass Pressure: 0~230PSI

Orifice: ϕ10.5mm Pipe size: 1/4"-1/2"



USLP Small Series 2/2-Way Direct Acting Solenoid Valve ····· 38
<Normally Closed>
Body material: SS316 Pressure: 0~230PSI
Orifice: ϕ9mm Pipe size: 1/4"-1/2"



USLP Series 2/2-Way Large Diameter Pilot Operated Solenoid Valve ····· 39-40
<Normally Closed>
Body material: forged brass Pressure: 5~230PSI
Orifice: ϕ13-50mm Pipe size: 3/8"-2"



USLP Series 2/2-Way Large Diameter Pilot Operated Solenoid Valve ····· 41
<Normally Closed>
Body material: SS316 Pressure: 5~230PSI
Orifice: ϕ13-50mm Pipe size: 3/8"-2"



USLP Series 2/2-Way Large Diameter Pilot Operated Solenoid Valve ····· 42
<Normally Closed>
Body material: SS316、SS304 Pressure: 5~230PSI
Orifice: ϕ25-100mm Pipe size: Flange connection



USLP Plastic Series 2/2-Way Pilot Operated Solenoid Valve ····· 43
<Normally Closed>
Body material: Nylon(PA6) Pressure: 5~145PSI
Orifice: ϕ13-40mm Pipe size: 3/8"-1 1/2"



USLP Series 2/2-Way Large Diameter Pilot Operated Solenoid Valve ····· 44-45
<Normally Open>
Body material: forged brass Pressure: 5~145PSI
Orifice: ϕ13-50mm Pipe size: 3/8"-2"



USLP Series 2/2-Way Large Diameter Pilot Operated Solenoid Valve 46-47

<Normally Open>

Body material: SS316 Pressure: 5~145PSI

Orifice: ϕ13-50mm Pipe size: 3/8"-2"、Flange connection



USLP Plastic Series 2/2-Way Pilot Operated Solenoid Valve 48

<Normally Open>

Body material: Nylon(PA6) Pressure: 5~115PSI

Orifice: ϕ13-40mm Pipe size: 3/8"-1 1/2"

USLA Series 2/2-Way Pilot Operated Piston Solenoid Valve 49



USLA Series 2/2-Way Pilot Operated Piston Solenoid Valve 50

<Normally Closed>

Body material: forged brass Pressure: 0~290PSI

Orifice: ϕ2.5-25mm Pipe size: 1/8"-1"



USLA Series 2/2-Way Pilot Operated Piston Solenoid Valve 51-52

<Normally Closed>

Body material: SS304 Pressure: 5~290PSI

Orifice: ϕ15-25mm Pipe size: 3/8"-1"、Flange connection

USLG Series 2/2-Way High Pressure Solenoid Valve 53



USLG Series 2/2-Way High Pressure Solenoid Valve 54

<Normally Closed>

Body material: forged brass、SS304 Pressure: 0~2300PSI

Orifice: ϕ1-25mm Pipe size: 1/8"-1"

USLV Series 3/2-Way Direct Acting Solenoid Valve 55



USLV Series 3/2-Way Direct Acting Solenoid Valve 56-62

Body material: forged brass、SS316 Pressure: 0~175PSI

Orifice: ϕ1.5-3mm Pipe size: 1/8"-1/4"

USLT Series 3/2-Way Direct Acting Solenoid Valve 63



USLT Series 3/2-Way Direct Acting Solenoid Valve 64-67

Body material: forged brass、SS304 Pressure: 0~190PSI
Orifice: ϕ1.5-4mm Pipe size: 1/8"-1/4"

USAV Direct Acting Gas Solenoid Valve 68



USAV Direct Acting Gas Solenoid Valve 69
<Normally Closed>

Body material: Aluminium Pressure: 0~10PSI
Orifice: ϕ6-9mm Pipe size: 1/4"-1/2"

USLE Series Manifold Type Series Solenoid Valve 70



USLE Series Manifold Type Series Solenoid Valve 71
<Normally Closed>

Body material: brass aluminum(standard) Pressure: 0~290PSI
Orifice: ϕ2-9mm Pipe size: 1/8"-1/2"



USLE Series Manifold Type Series Solenoid Valve 72-73
<Normally Closed>

Body material: forged brass Pressure: 0~190PSI
Orifice: ϕ10.5mm Pipe size: 1/4"-1/2"

USLJ Plate-Type，Integrated Series Solenoid Valve 74



USLJ Plate-Type，Integrated Series Solenoid Valve 75-78
<Normally Closed>

Body material: forged brass Pressure: 0~365PSI
Orifice: ϕ1.2~1.5mm Pipe size: Plate connection

USLY Series 2/2-Way Solenoid Valve 79



USLY Series 2/2-Way Solenoid Valve 80

Body material: forged brass、SS304 Pressure: 0~435PSI

Orifice: ϕ1~2.5mm Pipe size: 1/8"-1/4"

WZS Solenoid Valves Numbering System For Order 81



WZS 2/2-Way Direct Acting Solenoid Valve 82

<Normally Closed>

Body material: forged brass Pressure: 0~8bar

Orifice: ϕ10~13mm Pipe size: 1/4"-1/2"



NZS 2/2-Way Large Diameter Direct Acting Solenoid Valve 83

<Normally Closed>

Body material: forged brass Pressure: 0~8bar

Orifice: ϕ16~25mm Pipe size: 3/8"-1"

WSLP Solenoid Valves Numbering System For Order 84



USLP Series Compact Series 2/2-Way Direct Acting Solenoid Valve 85

<Normally Closed>

Body material: forged brass Pressure: 0~10bar

Orifice: ϕ3mm Pipe size: 1/8"-3/8"



WSLP Series 2/2-Way Large Diameter Pilot Operated Solenoid Valve 86

<Normally Closed>

Body material: forged brass Pressure: 0.5~10bar

Orifice: ϕ13-25mm Pipe size: 3/8"-1"

NZS Solenoid Valves Numbering System For Order

1	2	3	4	5	6	7	8	9	10
Valve Series	Mode of Operation	Coil Type	Coil Class	Voltage	Seal Material	Body Material	Pipe Size	Orifice (mm)	Options
NZS	1	D	F	02	E	1	E	20	N
	1: Normally Closed 2: Normally Open	D: DIN Standard Connections, Fully Encapsulated A=Metallic Housing DIN standard N: Lead Wires, Water-tight, Fully Encapsulated X: Explosion-proof S: NASS Coil M: SM Coil	F:F Class H:H Class (UL)	02= AC220V AC230V 01= AC110V AC120V 03= AC36V 04= AC48V 05= AC24V 08= AC380V 12= DC12V 13= DC24V	E= EPDM	1=Forged Brass 9=Forged Brass All the material is lead-free copper	C=3/8" D=1/2" C=3/8" D=1/2" E=3/4" G=1" C=3/8" D=1/2" E=3/4" G=1" H=1 1/4" J=1 1/2" K=2"	04=4.0 05=5.0 06=6.0 C8=7.5 10=10.0 10=10.0 13=13.0 16=16.0 20=20.0 16=16.0 20=20.0 20=20.0 25=25.0 32=32.0 32=32.0 40=40.0 40=40.0 50=50.0	M=Manual override L=Neon lamp K=Mounting Bracket N=NPT P=PT R=RC RP=RP Blank is G thread

NZS Compact Series 2/2-Way Direct Acting Solenoid Valve <Normally Closed>

1：2/2 way normally closed solenoid valve, closed when de-energized open , open when energized
2：Body material：Brass (Lead free copper)
3：Ambient temp ： 0~65 ℃ Fluids Temp:0~120℃
4：Flow as the arrow ,mounts in any position ; best position is solenoid vertical and upright direction
5：Voltage ： AC220V/110V/230V/240V 50/60HZ DC24V/12V +10% to -10% applicable voltage
6：Seals ： EPDM
7：Coil can fix SM Coil.

Normally Closed **De-energized**
Closed

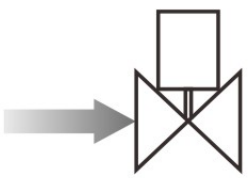

Energized
Open



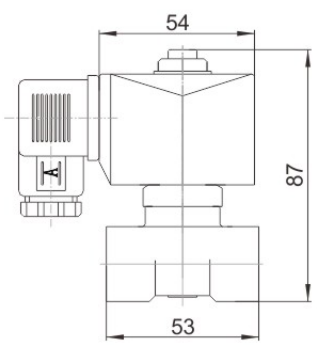

Φ4、5、6、7.5(3/8"、1/2")

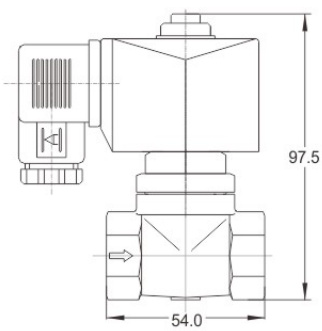

Φ10— (3/8"、1/2")



Valve Selection List

Pipe Conn -ection NPT	Orifice mm	CV Factor	Operating pressure differential (PSI)					Max. fluids Temp. ℃	Coil Type	Power consumption		Coil Class	Model Code 220VAC NPT	Weight KG
			Min.	Max.						VA	W			
				Air Gas		Liquids				AC 220V	DC 24V			
				AC	DC	AC	DC							
3/8”	4	0.6	0	120	75	120	75	120	D	20	20	F	NZS1DF02E1C04N	0.6
	5	0.65	0	90	60	90	60	120	D	20	20	F	NZS1DF02E1C05N	0.51
	6	0.8	0	60	40	60	40	120	D	20	20	F	NZS1DF02E1C06N	0.51
	7.5	1.0	0	20	15	20	15	120	D	20	20	F	NZS1DF02E1CC8N	0.49
	10	1.6	0	5	5	5	5	120	D	20	20	F	NZS1DF02E1C10N	0.62
1/2”	4	0.6	0	120	75	120	75	120	D	20	20	F	NZS1DF02E1D04N	0.48
	5	0.65	0	90	60	90	60	120	D	20	20	F	NZS1DF02E1D05N	0.48
	6	0.8	0	60	40	60	40	120	D	20	20	F	NZS1DF02E1D06N	0.46
	7.5	1.0	0	20	15	20	15	120	D	20	20	F	NZS1DF02E1DC8N	0.45
	10	1.6	0	5	5	5	5	120	D	20	20	F	NZS1DF02E1D10N	0.59

NZS 2/2-Way Direct Acting Solenoid Valve <Normally Closed>

2/2 way normally closed solenoid valve, closed when de-energized open , open when energized

Max.Allowable pressure:360PSI

Ambient temp： 0~65 ℃

Body material：Brass (Lead free copper)

Voltage： AC220V/110V/230V/240V 50/60Hz

DC24V/12V +10% to -10% applicable voltage

Seals： EPDM

Flow as the arrow ,mounts in any position ; best position is solenoid vertical and upright direction

Coil can fix SM/UL Coil.



External Dimensions

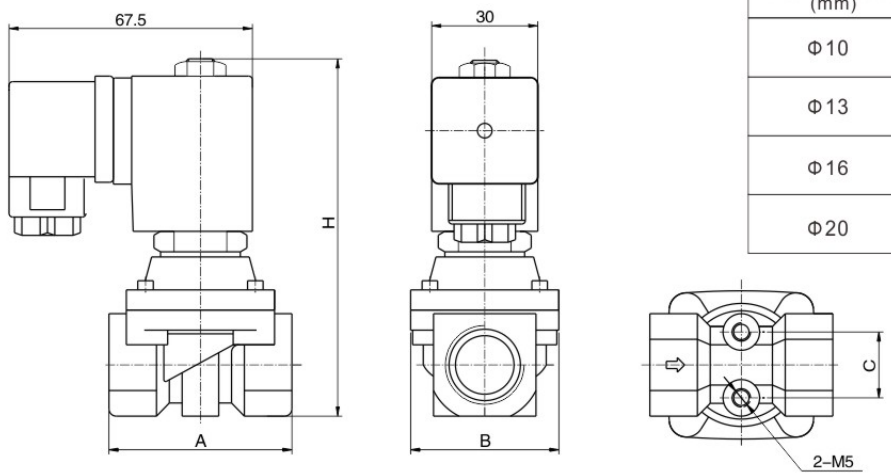

Flow diameter (mm)	interface G	A	B	C	H
Φ10	3/8"	50	40.5	18	98
	1/2"	50	40.5	18	98
Φ13	3/8"	55	43	18	98
	1/2"	55	43	18	98
Φ16	1/2"	60	49	25	105
	3/4"	60	49	25	105
Φ20	3/4"	72	60	28	113
	1"	72	60	28	113

Valve Selection List

Pipe Conn -ection NPT	Orifice mm	CV Factor	Operating pressure differential (PSI) Min.	Max. Air Gas AC	Max. Air Gas DC	Max. Liquids AC	Max. Liquids DC	Max. fluids Temp. ℃	Coil Type	Power consumption VA AC 220V	Power consumption W DC 24V	Coil Class	Model Code 220VAC NPT	Weight KG
3/8"	10	2.4	0	290	230	290	230	120	D	22	13	F	NZS1DF02E9C10N	0.54
	13	3.1	0	230	175	230	175	120	D	22	13	F	NZS1DF02E9C13N	0.56
1/2"	10	2.4	0	290	230	290	230	120	D	22	13	F	NZS1DF02E9D10N	0.53
	13	3.1	0	230	175	230	175	120	D	22	13	F	NZS1DF02E9D13N	0.55
	16	4.0	0	175	145	175	145	120	D	22	13	F	NZS1DF02E9D16N	0.81
3/4"	16	4.0	0	175	145	175	145	120	D	22	13	F	NZS1DF02E9E16N	0.8
	20	5.6	0	145	145	145	145	120	D	22	13	F	NZS1DF02E9E20N	1.1
1"	20	5.6	0	145	145	145	145	120	D	22	13	F	NZS1DF02E9G20N	1.0

NZS 2/2-Way Large Diameter Direct Acting Solenoid Valve

2/2 way normally closed solenoid valve, closed when de-energized open , open when energized

Body material：Brass (Lead free copper)

Ambient temp ： 0~65 ℃ Fluids Temp:0~120℃

Voltage ： AC220V/110V/230V/240V 50/60Hz

DC24V/12V +10% to -10% applicable voltage

Seals ： EPDM

Flow as the arrow ,mounts in any position ; best position is solenoid vertical and upright direction

Size below DN25 can fix SM/UL coil





Construction, External Dimensions Chart

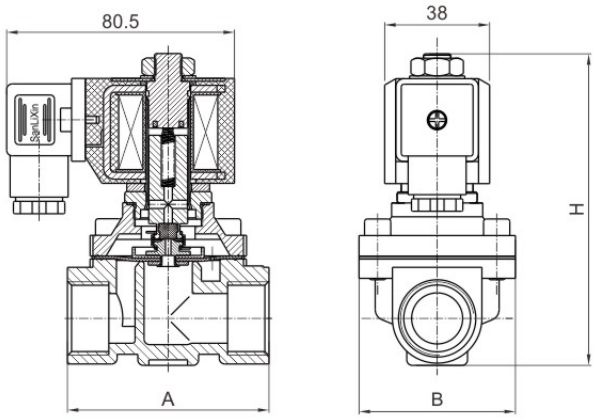

Φ16~Φ25

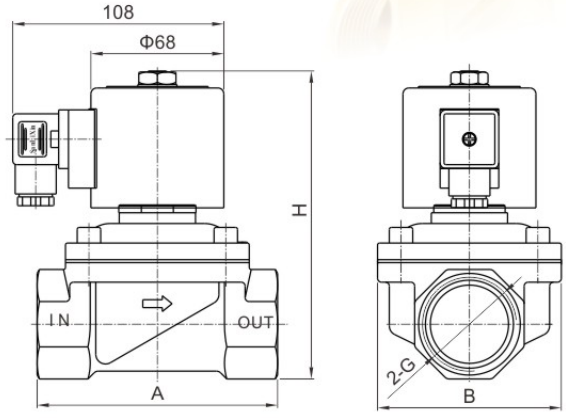

Φ32~Φ50

Valve Selection List

Pipe Connection NPT	Orifice mm	CV Factor	Operating pressure differential (PSI) Min.	Max. Air Gas AC	Max. Air Gas DC	Max. Liquids AC	Max. Liquids DC	Max. fluids Temp. ℃	Coil Type	Power consumption VA AC 220V	Power consumption W DC 24V	Coil Class	External Dimensions LengthxWidth xHeight AxBxH	Model Code 220VAC NPT	Weight KG
3/8”	16	4.8	0	145	85	145	85	120	D	20	20	F	69×57×106	NZS1DF02E1C16N	0.9
1/2”	16	4.8	0	145	85	145	85	120	D	20	20	F	69×57×106	NZS1DF02E1D16N	0.9
3/4”	20	7.6	0	145	85	145	85	120	D	20	20	F	73×57×114	NZS1DF02E1E20N	1.08
1”	20	7.6	0	145	85	145	85	120	D	20	20	F	80×62×117	NZS1DF02E1G20N	1.35
	25	12	0	145	85	145	85	120	D	20	20	F	99×77×121	NZS1DF02E1G25N	1.4
11/4”	32	24	0	145	85	145	85	120	D	57	45	F	112×86.5×150	NZS1DF02E1H32N	2.7
11/2”	32	24	0	145	85	145	85	120	D	57	45	F	120×86.5×160	NZS1DF02E1J32N	3.0
	40	29	0	145	85	145	85	120	D	57	45	F	123×94×160	NZS1DF02E1J40N	3.2
2”	40	29	0	145	85	145	85	120	D	57	45	F	130×94×175	NZS1DF02E1K40N	3.8
	50	48	0	145	85	145	85	120	D	57	45	F	165×123×183	NZS1DF02E1K50N	5.4

NZS 2/2-Way Direct Acting Solenoid Valve <Normally Open>

2/2 way normally open solenoid valve, open when de-energized open , closed when energized

Max.Allowable pressure:190PSI

Ambient temp： 0~65 ℃

Body material：Brass (Lead free copper)

Voltage： AC220V/110V/230V/240V 50/60Hz

DC24V/12V +10% to -10% applicable voltage

Seals： EPDM

Flow as the arrow ,mounts in any position ; best position is solenoid vertical and upright direction



External Dimensions

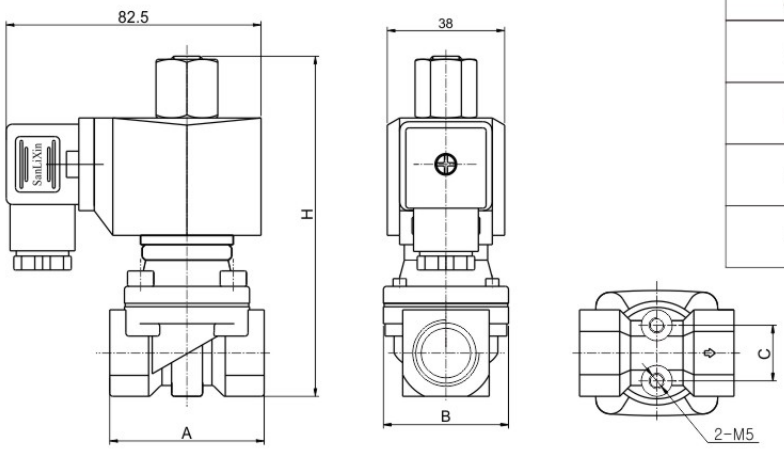

Flow diameter (mm)	interface G	A	B	C	H
Φ10	3/8"	50	40.5	18	110
	1/2"	50	40.5	18	110
Φ13	3/8"	55	43	18	110
	1/2"	55	43	18	110
Φ16	1/2"	60	49	25	117
	3/4"	60	49	25	117
Φ20	3/4"	72	60	28	125
	1"	72	60	28	125

Valve Selection List

Pipe Connection NPT	Orifice mm	CV Factor	Operating pressure differential (PSI) Min.	Max. Air Gas AC	Max. Air Gas DC	Max. Liquids AC	Max. Liquids DC	Max. fluids Temp. ℃	Coil Type	Power consumption VA AC 220V	Power consumption W DC 24V	Coil Class	Model Code 220VAC NPT	Weight KG
3/8"	10	2.4	0	190	190	190	190	120	D	20	20	F	NZS2DF02E9C10N	0.7
	13	3.1	0	190	190	190	190	120	D	20	20	F	NZS2DF02E9C13N	0.68
1/2"	10	2.4	0	190	190	190	190	120	D	20	20	F	NZS2DF02E9D10N	0.7
	13	3.1	0	190	190	190	190	120	D	20	20	F	NZS2DF02E9D13N	0.67
	16	4.0	0	175	175	175	175	120	D	20	20	F	NZS2DF02E9D16N	0.69
3/4"	16	4.0	0	175	175	175	175	120	D	20	20	F	NZS2DF02E9E16N	0.95
	20	5.6	0	145	145	145	145	120	D	20	20	F	NZS2DF02E9E20N	1.24
1"	20	5.6	0	145	145	145	145	120	D	20	20	F	NZS2DF02E9G20N	1.14

NZS 2/2-Way Large Diameter Direct Acting Solenoid Valve

2/2-way normally open solenoid valve, open when de-energized , closed when energized

Body material：Brass (Lead free copper)

Ambient temp ： 0~65 ℃ Fluids Temp:0~120℃

Voltage ： AC220V/110V/230V/240V 50/60Hz

DC24V/12V +10% to -10% applicable voltage

Seals ： EPDM

Flow as the arrow ,mounts in any position ; best position is solenoid vertical and upright direction



Construction, External Dimensions Chart

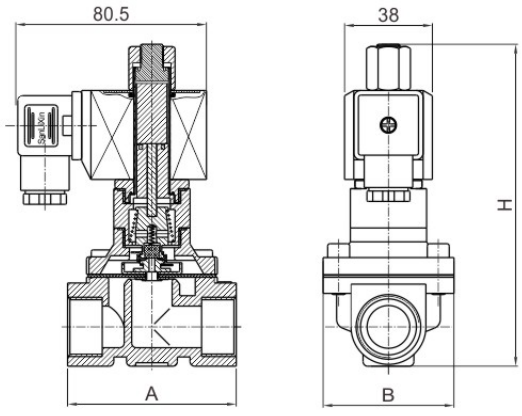

DN15-25mm

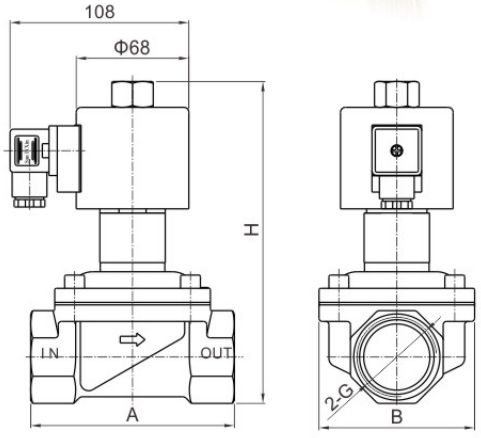

DN32-50MM

Valve Selection List

Pipe Conn -ection NPT	Orifice mm	CV Factor	Operating pressure differential (PSI) Min.	Max. Air Gas AC	Max. Air Gas DC	Max. Liquids AC	Max. Liquids DC	Max. fluids Temp. ℃	Coil Type	Power consumption VA AC 220V	Power consumption W DC 24V	Coil Class	External Dimensions LengthxWidth xHeight AxBxH	Model Code 220VAC NPT	Weight KG
3/8”	4	0.6	0	60	60	60	60	120	D	33	20	F	52.5×32.5×115	NZS2DF02E1C04N	0.7
3/8”	16	4.8	0	75	75	75	75	120	D	33	20	F	69×57×135	NZS2DF02E1C16N	1.2
1/2”	16	4.8	0	75	75	75	75	120	D	33	20	F	69×57×135	NZS2DF02E1D16N	1.15
3/4”	20	7.6	0	75	75	75	75	120	D	33	20	F	73×57×142	NZS2DF02E1E20N	1.25
1”	20	7.6	0	75	75	75	75	120	D	33	20	F	80×62×145	NZS2DF02E1G20N	1.35
	25	12	0	75	75	75	75	120	D	33	20	F	99×77×150	NZS2DF02E1G25N	1.7
11/4”	32	24	0	75	75	75	75	120	D	57	45	F	112×86.5×180	NZS2DF02E1H32N	2.9
11/2”	32	24	0	75	75	75	75	120	D	57	45	F	120×86.5×190	NZS2DF02E1J32N	3.0
	40	29	0	75	75	75	75	120	D	57	45	F	123×94×190	NZS2DF02E1J40N	3.2
2”	40	29	0	75	75	75	75	120	D	57	45	F	130×94×190	NZS2DF02E1K40N	3.8
	50	48	0	75	75	75	75	120	D	57	45	F	165×123×209	NZS2DF02E1K50N	5.6

NSLP Solenoid Valves Numbering System For Order

1	2	3	4	5	6	7	8	9	10
Valve Series	Mode of Operation	Coil Type	Coil Class	Voltage	Seal Material	Body Material	Pipe Size	Orifice (mm)	Options
NSLP	1	D	F	02	E	1	E	20	N
	1: Normally Closed 2: Normally Open	D: DIN Standard Connections, Fully Encapsulated N: Lead Wires, Water-tight, Fully Encapsulated X: Explosion-proof S: NASS Coil M: SM Coil	F:F Class H:H Class (UL)	02= AC220V AC230V 01= AC110V AC120V 03= AC36V 04= AC48V 05= AC24V 08= AC380V 12= DC12V 13= DC24V	E= EPDM	1=Forged Brass 9=Forged Brass All the brass materinal is :lead-free copper	A=1/8" B=1/4"	01=1.0 C2=1.5 C3=2.5 03=3.0 04=4.0 05=5.0 06=6.0	M=Manual override L=Neon lamp K=Mounting Bracket N=NPT P=PT R=RC RP=RP Blank is G thread
							C=3/8"	03=3.0 04=4.0	
							C=3/8" D=1/2"	04=4.0 05=5.0 06=6.0 10=10.0 C9=10.5 13=13.0	
							E=3/4"	20=20.0	
							G=1"	20=20.0 25=25.0	
							H=1 1/4"	32=32.0	
							J=1 1/2"	40=40.0	
							K=2"	40=40.0 50=50.0	

2/2 way normally closed solenoid valve, closed when de-energized open , open when energized

Body material：Brass (Lead free copper)

Ambient temp ： 0~65 ℃ Fluids Temp:0~120℃

Voltage ： AC220V/110V/230V/240V 50/60Hz DC24V/12V +10% to -10% applicable voltage

Seals ： EPDM

Flow as the arrow, mounts in any position; best position is upright direction

Can fix SM/UL coil

Construction, External Dimensions Chart

Φ1-3mm (1/8"、1/4")

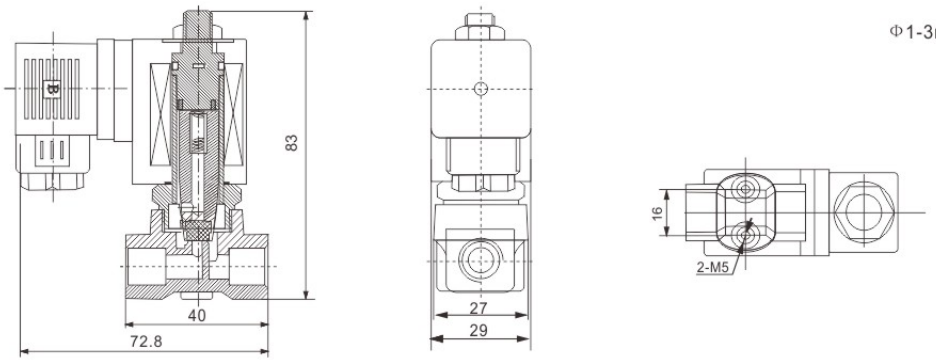

Φ4 、Φ5 、Φ 6mm (1/8"、1/4")

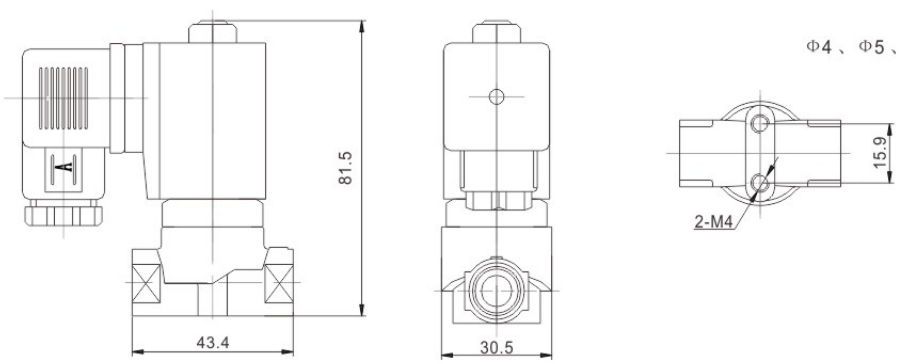

Φ4、Φ5、 Φ6mm (3/8"、1/2")

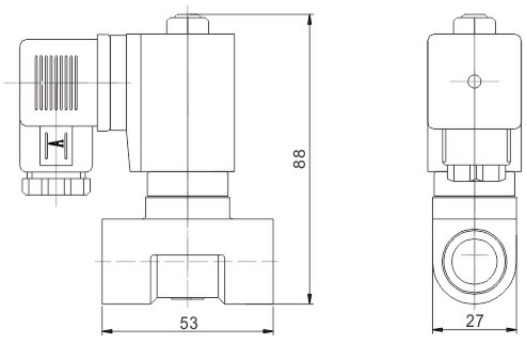

NSLP Compact Series 2/2-Way Direct Acting Solenoid Valve <Normally Closed>





Valve Selection List

Pipe Connection NPT	Orifice mm	CV Factor	Operating pressure differential (PSI) Min.	Max. Air Gas AC	Max. Air Gas DC	Max. Liquids AC	Max. Liquids DC	Max. fluids Temp. ℃	Coil Type	Power consumption VA AC 220V	Power consumption W DC 24V	Coil Class	Model Code 220VAC NPT	Weight KG
1/8"	1	0.04	0	435	435	435	435	120	D	22	13	F	NSLP1DF02E1A01N	0.37
	1.2	0.05	0	435	435	435	435	120	D	22	13	F	NSLP1DF02E1AC1N	0.37
	1.5	0.09	0	435	435	435	435	120	D	22	13	F	NSLP1DF02E1AC2N	0.37
	2	0.14	0	435	365	435	365	120	D	22	13	F	NSLP1DF02E1A02N	0.37
	2.5	0.20	0	365	290	365	290	120	D	22	13	F	NSLP1DF02E1AC3N	0.37
	3	0.23	0	190	190	190	190	120	D	22	13	F	NSLP1DF02E1A03N	0.37
	4	0.6	0	115	115	115	115	120	D	22	13	F	NSLP1DF02E1A04N	0.36
	5	0.65	0	60	40	60	40	120	D	22	13	F	NSLP1DF02E1A05N	0.36
	6	0.8	0	45	30	45	30	120	D	22	13	F	NSLP1DF02E1A06N	0.36
1/4"	1	0.04	0	435	435	435	435	120	D	22	13	F	NSLP1DF02E1B01N	0.36
	1.2	0.05	0	435	435	435	435	120	D	22	13	F	NSLP1DF02E1BC1N	0.36
	1.5	0.09	0	435	435	435	435	120	D	22	13	F	NSLP1DF02E1BC2N	0.36
	2	0.14	0	435	365	435	365	120	D	22	13	F	NSLP1DF02E1B02N	0.36
	2.5	0.20	0	365	290	365	290	120	D	22	13	F	NSLP1DF02E1BC3N	0.36
	3	0.23	0	190	190	190	190	120	D	22	13	F	NSLP1DF02E1B03N	0.36
	4	0.6	0	115	115	115	115	120	D	22	13	F	NSLP1DF02E1B04N	0.35
	5	0.65	0	60	40	60	40	120	D	22	13	F	NSLP1DF02E1B05N	0.35
	6	0.8	0	45	30	45	30	120	D	22	13	F	NSLP1DF02E1B06N	0.35
3/8"	3	0.3	0	190	190	190	190	120	D	22	13	F	NSLP1DF02E1C03N	0.34
	4	0.6	0	115	115	115	115	120	D	22	13	F	NSLP1DF02E1C04N	0.34
	5	0.65	0	60	40	60	40	120	D	22	13	F	NSLP1DF02E1C05N	0.46
	6	0.8	0	45	30	45	30	120	D	22	13	F	NSLP1DF02E1C06N	0.46
1/2"	4	0.6	0	115	115	115	115	120	D	22	13	F	NSLP1DF02E1D04N	0.34
	5	0.65	0	60	40	60	40	120	D	22	13	F	NSLP1DF02E1D05N	0.43
	6	0.8	0	45	30	45	30	120	D	22	13	F	NSLP1DF02E1D06N	0.43

NSLP Compact Series 2/2-Way Direct Acting Solenoid Valve

2-Way normally open solenoid valve, Open when de-energized, Closed when energized.
Serialized products, small in size, high flow rate, widely use
Body material: forged brass.
Ambient Temp. 0℃~65℃, Fluids Temp 0℃~120℃.
Seals: EPDM
Flow as the arrow, mounts in any position;
best position is upright direction
Voltage: 220VAC/230VAC/240VAC/110VAC/24VAC 50/60Hz 24VDC/12VDC;
Voltage Tolerance: +10% to -10% applicable voltage can fix Nass coil
Can fix SM/UL coil



External Dimensions

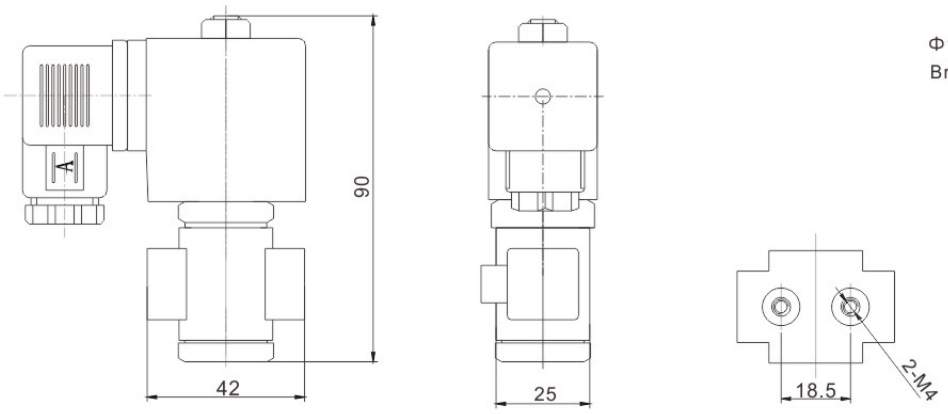

Φ1~Φ4mm 1/8" 1/4"
Brass Body :9

Valve Selection List

Pipe Connection NPT	Orifice mm	CV Factor	Operating pressure differential (PSI) Min.	Max. Air Gas AC	Max. Air Gas DC	Max. Liquids AC	Max. Liquids DC	Max. fluids Temp. ℃	Coil Type	Power consumption VA AC 220V	Power consumption W DC 24V	Coil Class	Model Code 220VAC NPT	Weight KG
1/8"	1	0.04	0	435	435	435	435	120	D	22	13	F	NSLP2DF02E9A01N	0.4
	1.5	0.09	0	290	290	290	290	120	D	22	13	F	NSLP2DF02E9AC2N	0.4
	2.5	0.2	0	220	220	220	220	120	D	22	13	F	NSLP2DF02E9AC3N	0.4
	3	0.25	0	175	175	175	175	120	D	22	13	F	NSLP2DF02E9A03N	0.4
	4	0.4	0	75	75	75	75	120	D	22	13	F	NSLP2DF02E9A04N	0.39
1/4"	1	0.04	0	435	435	435	435	120	D	22	13	F	NSLP2DF02E9B01N	0.39
	1.5	0.09	0	290	290	290	290	120	D	22	13	F	NSLP2DF02E9BC2N	0.39
	2.5	0.2	0	220	220	220	220	120	D	22	13	F	NSLP2DF02E9BC3N	0.39
	3	0.25	0	175	175	175	175	120	D	22	13	F	NSLP2DF02E9B03N	0.39
	4	0.4	0	75	75	75	75	120	D	22	13	F	NSLP2DF02E9B04N	0.39

NSLP Small Series 2/2-Way Pilot Operated Solenoid Valve <Normally Closed>

2/2 way normally closed solenoid valve, closed when de-energized open , open when energized

Body material：Brass (Lead free copper)

Ambient temp： 0~65 ℃ Fluids Temp:0~120℃

Voltage： AC220V/110V/230V/240V 50/60Hz

DC24V/12V +10% to -10% applicable voltage

Seals： EPDM

Flow as the arrow, mounts in any position;
best position is upright direction

Can fix SM/UL coil



External Dimensions

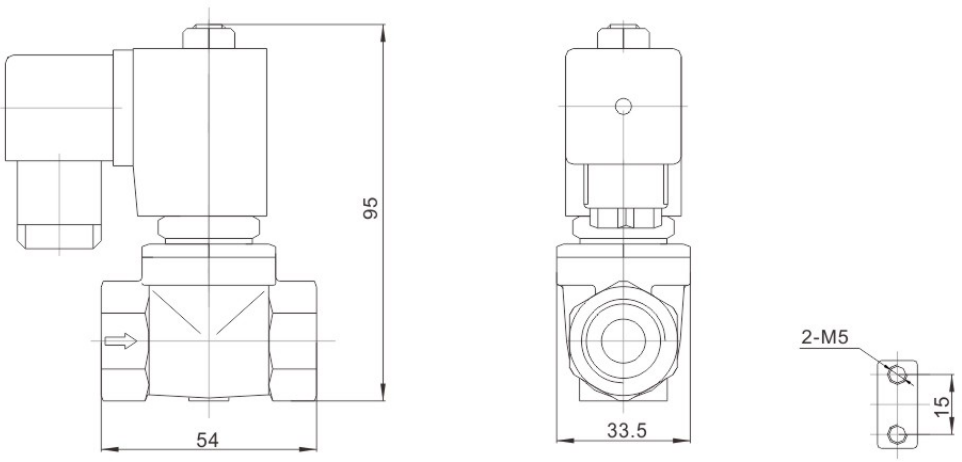

Valve Selection List

Pipe Conn -ection NPT	Orifice mm	CV Factor	Operating pressure differential (PSI) Min.	Max. Air Gas AC	Max. Air Gas DC	Max. Liquids AC	Max. Liquids DC	Max. fluids Temp. ℃	Coil Type	Power consumption VA AC 220V	Power consumption W DC 24V	Coil Class	Model Code 220VAC NPT	Weight KG
1/4”	10.5	1.47	1.5	230	145	230	145	120	D	22	13	F	NSLP1DF02E1BC9N	0.51
3/8”	10.5	1.68	1.5	230	145	230	145	120	D	22	13	F	NSLP1DF02E1CC9N	0.49
1/2”	10.5	1.75	1.5	230	145	230	145	120	D	22	13	F	NSLP1DF02E1DC9N	0.46

2/2 way normally closed solenoid valve, closed when de-energized open , open when energized

Body material：Brass (Lead free copper)

Ambient temp ： 0~65 ℃ Fluids Temp:0~120℃

Voltage ： AC220V/110V/230V/240V 50/60Hz

DC24V/12V +10% to -10% applicable voltage

Seals ： EPDM

Flow as the arrow, mounts in any position; best position is upright direction

Can fix SM/UL coil



External Dimensions

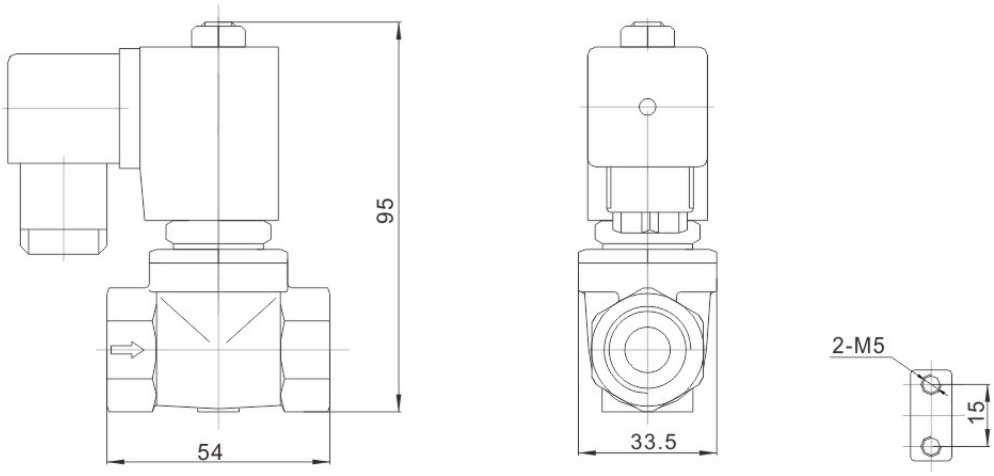

Valve Selection List

Pipe Conn -ection NPT	Orifice mm	CV Factor	Operating pressure differential (PSI) Min.	Max. Air Gas AC	Max. Air Gas DC	Max. Liquids AC	Max. Liquids DC	Max. fluids Temp. ℃	Coil Type	Power consumption VA AC 220V	Power consumption W DC 24V	Coil Class	Model Code 220VAC NPT	Weight KG
1/4”	10.5	1.47	0	230	145	230	145	120	D	22	13	F	NSLP1DF02E1B10N	0.51
3/8”	10.5	1.68	0	230	145	230	145	120	D	22	13	F	NSLP1DF02E1C10N	0.49
1/2”	10.5	1.75	0	230	145	230	145	120	D	22	13	F	NSLP1DF02E1D10N	0.46

NSLP 2/2-Way Large Diameter Pilot Operated Solenoid Valve <*Normally Closed*>

2/2 way normally closed solenoid valve, closed when de-energized open , open when energized

Serialized products, small in size, high flow rate, wide usage

Body material：Brass (Lead free copper)

Seals ： EPDM

Max.Allowable pressure:290PSI

Voltage ： AC220V/110V/230V/240V 50/60Hz

DC24V/12V +10% to -10% applicable voltage

Flow as the arrow, mounts in any position;
best position is upright direction

Can fix SM/UL coil

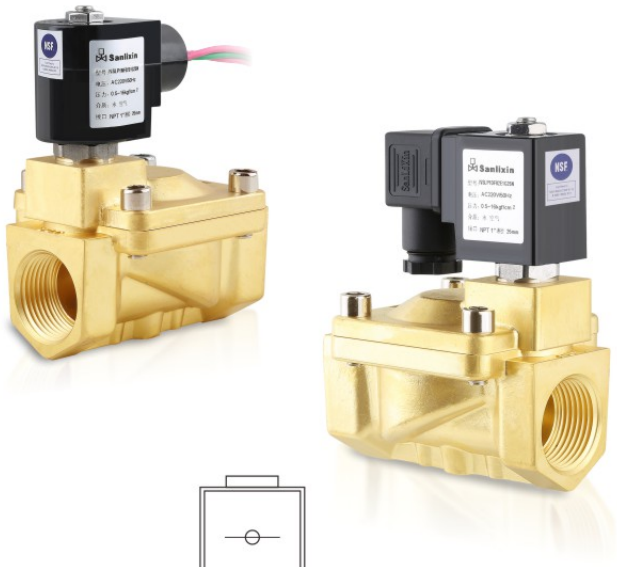

Construction, External Dimensions Chart

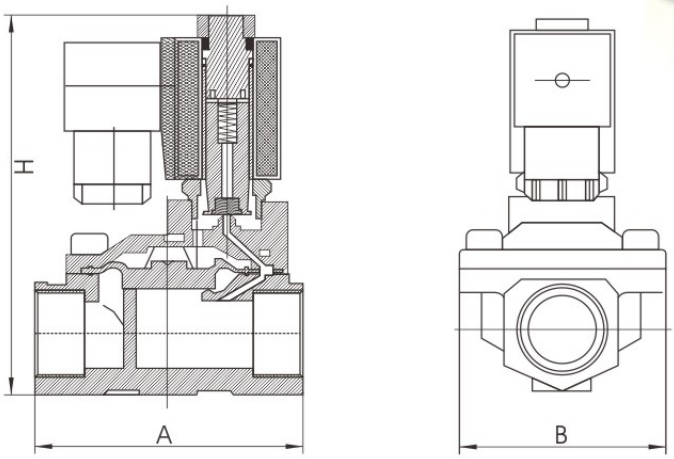

Valve Selection List

Pipe Connection NPT	Orifice mm	CV Factor	Operating pressure differential (PSI) Min.	Max. Air Gas AC	Max. Air Gas DC	Max. Liquids AC	Max. Liquids DC	Max. fluids Temp. ℃	Coil Type	Power consumption VA AC 220V	Power consumption W DC 24V	Coil Class	External Dimensions LengthxWidth xHeight AxBxH	Model Code 220VAC NPT	Weight KG
3/8”	13	4.5	7.5	230	230	230	230	120	D	22	13	F	66×48×107	NSLP1DF02E1C13N	0.8
1/2”	13	4.5	7.5	230	230	230	230	120	D	22	13	F	66×48×107	NSLP1DF02E1D13N	0.7
3/4”	20	7.6	7.5	230	230	230	230	120	D	22	13	F	75×58×112	NSLP1DF02E1E20N	0.9
1”	20	7.6	7.5	230	230	230	230	120	D	22	13	F	81×58×119	NSLP1DF02E1G20N	1.1
	25	12	7.5	230	230	230	230	120	D	22	13	F	96×70×131	NSLP1DF02E1G25N	1.4
11/4”	35	22	7.5	230	230	230	230	120	D	22	13	F	131×96×146	NSLP1DF02E1H35N	2.8
11/2”	40	30	7.5	230	230	230	230	120	D	22	13	F	131×96×146	NSLP1DF02E1J40N	2.7
2”	40	30	7.5	230	230	230	230	120	D	22	13	F	136×96×152	NSLP1DF02E1K40N	3.1
	50	48	7.5	230	230	230	230	120	D	22	13	F	165×120×167	NSLP1DF02E1K50N	4

2/2 way normally closed solenoid valve, closed when de-energized open , open when energized

Body material：Brass (Lead free copper)

Ambient temp ： 0~65 ℃ Fluids Temp:0~120℃

Voltage ： AC220V/110V/230V/240V 50/60Hz

DC24V/12V +10% to -10% applicable voltage

Seals ： EPDM

Flow as the arrow, mounts in any position; best position is upright direction

Can fix SM/UL coil



External Dimensions

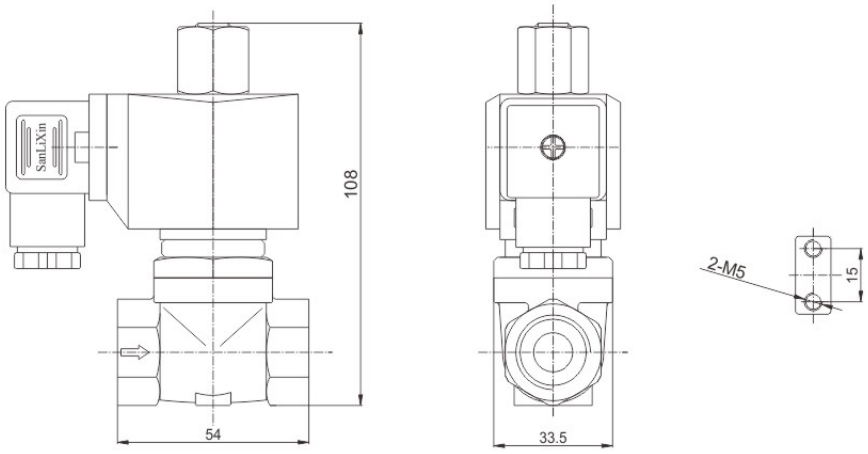

Valve Selection List

Pipe Conn -ection NPT	Orifice mm	CV Factor	Operating pressure differential (PSI) Min.	Max. Air Gas AC	Max. Air Gas DC	Max. Liquids AC	Max. Liquids DC	Max. fluids Temp. ℃	Coil Type	Power consumption VA AC 220V	Power consumption W DC 24V	Coil Class	Model Code 220VAC NPT	Weight KG
1/4”	10.5	1.47	1.5	190	190	190	190	120	D	20	20	F	NSLP2DF02E1BC9N	0.66
3/8”	10.5	1.68	1.5	190	190	190	190	120	D	20	20	F	NSLP2DF02E1CC9N	0.64
1/2”	10.5	1.75	1.5	190	190	190	190	120	D	20	20	F	NSLP2DF02E1DC9N	0.61

NSLP 2/2-Way Large Diameter Pilot Operated Solenoid Valve <Normally Open>

2/2 way normally closed solenoid valve, open when de-energized , closed when energized

Serialized products, small in size, high flow rate, widely use

Body material：Brass (Lead free copper)

Seals ： EPDM

Max.Allowable pressure:190PSI

Voltage ： AC220V/110V/230V/240V 50/60Hz

DC24V/12V +10% to -10% applicable voltage

Flow as the arrow, mounts in any position;
best position is upright direction

Can fix SM/UL coil



Construction, External Dimensions Chart

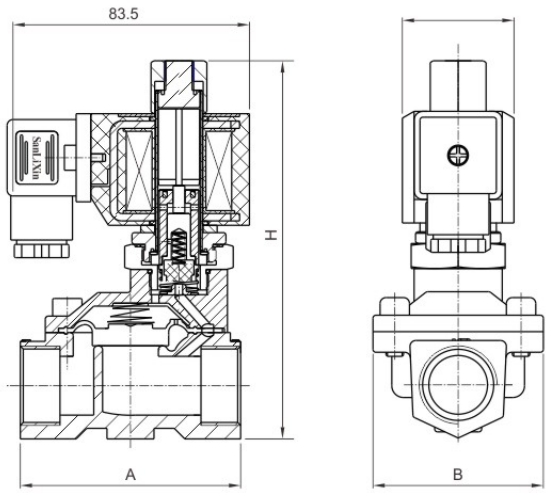

Valve Selection List

Pipe Conn -ection NPT	Orifice mm	CV Factor	Operating pressure differential (PSI) Min.	Max. Air Gas AC	Max. Air Gas DC	Max. Liquids AC	Max. Liquids DC	Max. fluids Temp. ℃	Coil Type	Power consumption VA AC 220V	Power consumption W DC 24V	Coil Class	External Dimensions LengthxWidth xHeight AxBxH	Model Code 220VAC NPT	Weight KG
3/8”	13	4.5	7.5	190	190	190	190	120	D	20	20	F	66×48×124	NSLP2DF02E1C13N	0.9
1/2”	13	4.5	7.5	190	190	190	190	120	D	20	20	F	66×48×124	NSLP2DF02E1D13N	0.9
3/4”	20	7.6	7.5	190	190	190	190	120	D	20	20	F	75×58×130	NSLP2DF02E1E20N	1.1
1”	20	7.6	7.5	190	190	190	190	120	D	20	20	F	81×68×136	NSLP2DF02E1G20N	1.3
	25	12	7.5	190	190	190	190	120	D	20	20	F	96×70×143	NSLP2DF02E1G25N	1.6
11/4”	35	22	7.5	115	115	115	115	120	D	20	20	F	131×96×158	NSLP2DF02E1H35N	3
11/2”	40	30	7.5	115	115	115	115	120	D	20	20	F	131×96×158	NSLP2DF02E1J40N	2.8
2”	40	30	7.5	115	115	115	115	120	D	20	20	F	136×96×164	NSLP2DF02E1K40N	3.2
	50	48	7.5	115	115	115	115	120	D	20	20	F	165×120×179	NSLP2DF02E1K50N	4.2

D04-310U Series Coil

This coil have passed UL(certificate:MH63799)

Product characteristics

① Use the high quility enamelled wire have passed UL
② Use the BMC cladding material to keep the qaility
③ Coil insulation class: H class
④ IP65
⑤ Ambient temperature:-10~65℃
⑥ DIN43650A



D04-310U

Item	Coil Code	Voltage	Power consumption
1	D04-3101U	AC220V/50Hz、AC240V/60Hz	20VA
2	D04-3102U	AC110V/50Hz、AC120V/60Hz	20VA
3	D04-31011U	AC230V-50/60Hz	21VA
4	D04-31013U	AC36V-50/60Hz	19VA
5	D04-3104U	AC24V-50/60Hz	20VA
6	D04-3106U	DC24V	17W
7	D04-3107U	DC12V	17W

External Dimensions

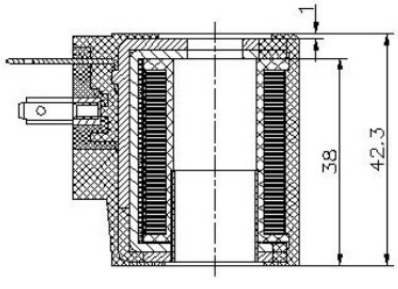

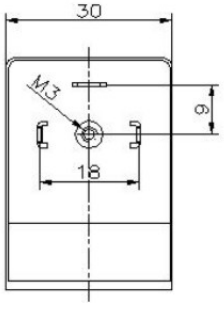

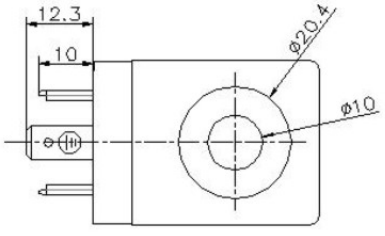

UZS Series Solenoid Valves Model Numbering System for Order <Normally Closed>

1	2	3	4	5	6	7	8	9	10
Valve Series	Mode of Operation	Coil Type	Coil Class	Voltage	Seal Material	Body Material	Pipe Size	Orifice (mm)	Options
UZS	1	D	H	01	N	1	E	20	N
	1= Normally Closed	D= DIN Standard Connections, Fully Encapsulated	H=H class (UL)	01= AC110V 50Hz/ AC120V 60Hz 02= AC220V 50Hz/ AC240V 60Hz 03=AC36V 05=AC24V 20=AC230V 50/60Hz 12=DC12V 13=DC24V	N=NBR E=EPDM V=VITON G=Silicone	9=Forged Brass 4=SS304	B=1/4" C=3/8" D=1/2" E=3/4" G=1"	10=10.0 13=13.0 16=16.0 20=20.0	M=Manual override L=Neon lamp K=Mounting Bracket N=NPT P=PT R=RC RP=RP Blank is G thread
						1=Forged Brass 4=SS304 3=SS316	C=3/8" D=1/2"	16=16.0	
							E=3/4"	20=20.0	
							G=1"	20=20.0 25=25.0	
						7=Plastic	D=1/2"	15=15.0	
							E=3/4"	20=20.0	
							G=1"	25=25.0	
						4=SS304 3=SS316	F=Flange Connection	15=15.0 20=20.0 25=25.0	

UZS Series 2/2-Way Direct Acting Solenoid Valve

2-Way normally open solenoid valve, open when de-energized,Closed when energized.

Max.Allowable pressure: 360 psi

Working pressure: 0-290 psi

Ambient Temp: -10-65℃

Voltage: AC110V/50Hz ; AC120/60Hz;
AC220V/50Hz; AC240V/60Hz,
AC230V 50/60Hz; AC36V 50/60Hz;
AC24V 50/60Hz;DC24V;DC12V ±10%

Flow as the arrow ,mounts in any position ; best position is solenoid vertical and upright direction

It can be widely used in the corresponding flow and pressure system , replace the same connection size but big orifice valve , can save a lot of cost

Can choose NSF certificate solenoid valve



External Dimensions

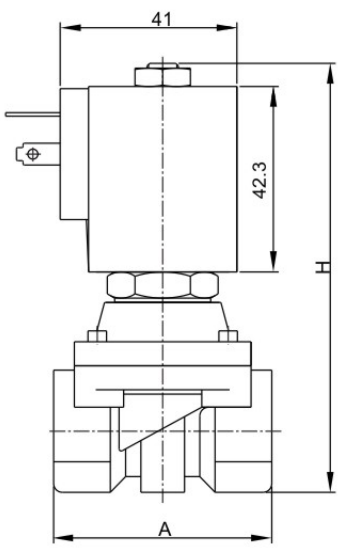

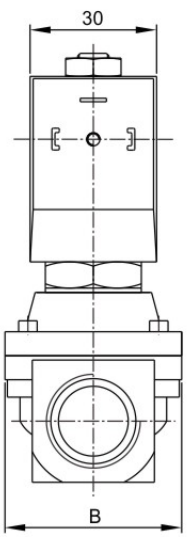

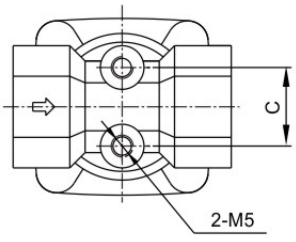

Flow diameter (mm)	interface G	A	B	C	H
Φ10	1/4"	50	40.5	18	98
	3/8"	50	40.5	18	98
	1/2"	50	40.5	18	98
Φ13	3/8"	55	43	18	98
	1/2"	55	43	18	98
Φ16	1/2"	60	49	25	105
	3/4"	60	49	25	105
Φ20	3/4"	72	60	28	113
	1"	72	60	28	113

UZS Series 2/2-Way Direct Acting Solenoid Valve <Normally Closed>

Valve Selection List

Pipe Conn -ection	Orifice mm	CV Factor	Operating pressure differential (PSI) Min.	Max. Air AC	Max. Air DC	Max. liquid AC	Max. liquid DC	Max. Light oil ≤20CST AC	Max. Light oil ≤20CST DC	Max. Temp. ℃	Coil Type	Power consumption VA AC 110V	Power consumption W DC 24V	Coil Class	Model Code 110VAC NPT	Weight (KG)
1/4"	10	1.9	0	290	230	290	230	290	230	80	D	20	17	H	UZS1DH01N9B10N	0.55
	10	1.9	0	290	230	290	230			120	D	20	17	H	UZS1DH01E9B10N	0.55
	10	1.9	0	290	230	290	230	290	230	120	D	20	17	H	UZS1DH01V9B10N	0.55
3/8"	10	2.4	0	290	230	290	230	290	230	80	D	20	17	H	UZS1DH01N9C10N	0.54
	10	2.4	0	290	230	290	230			120	D	20	17	H	UZS1DH01E9C10N	0.54
	10	2.4	0	290	230	290	230	290	230	120	D	20	17	H	UZS1DH01V9C10N	0.54
	13	3.1	0	230	175	230	175	230	175	80	D	20	17	H	UZS1DH01N9C13N	0.56
	13	3.1	0	230	175	230	175			120	D	20	17	H	UZS1DH01E9C13N	0.56
	13	3.1	0	230	175	230	175	230	175	120	D	20	17	H	UZS1DH01V9C13N	0.56
1/2"	10	2.4	0	290	230	290	230	290	230	80	D	20	17	H	UZS1DH01N9D10N	0.53
	10	2.4	0	290	230	290	230			120	D	20	17	H	UZS1DH01E9D10N	0.53
	10	2.4	0	290	230	290	230	290	230	120	D	20	17	H	UZS1DH01V9D10N	0.53
	13	3.1	0	230	175	230	175	230	175	80	D	20	17	H	UZS1DH01N9D13N	0.55
	13	3.1	0	230	175	230	175			120	D	20	17	H	UZS1DH01E9D13N	0.55
	13	3.1	0	230	175	230	175	230	175	120	D	20	17	H	UZS1DH01V9D13N	0.55
	16	4.0	0	175	145	175	145	175	145	80	D	20	17	H	UZS1DH01N9D16N	0.81
	16	4.0	0	175	145	175	145			120	D	20	17	H	UZS1DH01E9D16N	0.81
	16	4.0	0	175	145	175	145	175	145	120	D	20	17	H	UZS1DH01V9D16N	0.81
3/4"	16	4.0	0	175	145	175	145	175	145	80	D	20	17	H	UZS1DH01N9E16N	0.8
	16	4.0	0	175	145	175	145			120	D	20	17	H	UZS1DH01E9E16N	0.8
	16	4.0	0	175	145	175	145	175	145	120	D	20	17	H	UZS1DH01V9E16N	0.8
	20	5.6	0	145	145	145	145	145	145	80	D	20	17	H	UZS1DH01N9E20N	1.1
	20	5.6	0	145	145	145	145			120	D	20	17	H	UZS1DH01E9E20N	1.1
	20	5.6	0	145	145	145	145	145	145	120	D	20	17	H	UZS1DH01V9E20N	1.1
1"	20	5.6	0	145	145	145	145	145	145	80	D	20	17	H	UZS1DH01N9G20N	1.0
	20	5.6	0	145	145	145	145			120	D	20	17	H	UZS1DH01E9G20N	1.0
	20	5.6	0	145	145	145	145	145	145	120	D	20	17	H	UZS1DH01V9G20N	1.0

UZS Series 2/2-Way Direct Acting Solenoid Valve

2/2 way Normally Closed,closed when de-energized open,open when energized.

Max.Allowable pressure: 360 PSI Working Pressure:0~290PSI

Ambient Temp.:-10~65℃

Voltage: AC110V/50Hz ; AC120/60Hz;
AC220V/50Hz; AC240V/60Hz,
AC230V 50/60Hz; AC36V 50/60Hz;
AC24V 50/60Hz;DC24V;DC12V ±10%

Flow as the arrow, mounts in any position; best position is solenoid vertical and upright direction





External Dimensions

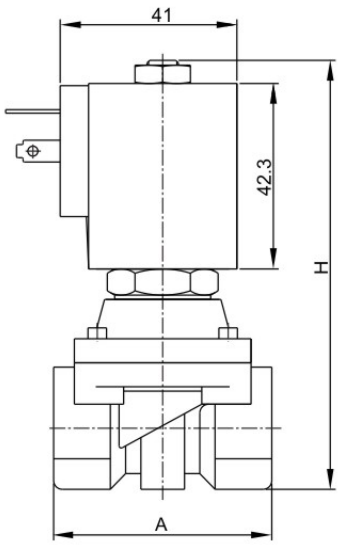

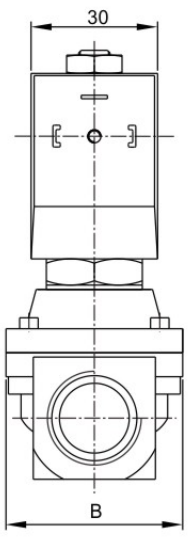

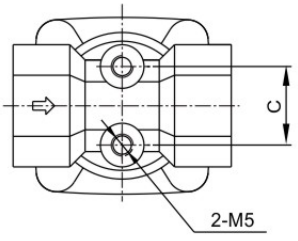

Flow diameter (mm)	interface G	A	B	C	H
Φ10	1/4"	50	40.5	18	98
	3/8"	50	40.5	18	98
	1/2"	50	40.5	18	98
Φ13	3/8"	55	43	18	98
	1/2"	55	43	18	98
Φ16	1/2"	60	49	25	105
	3/4"	60	49	25	105
Φ20	3/4"	72	60	28	113
	1"	72	60	28	113

Valve Selection List

Pipe Conn -ection	Orifice mm	CV Factor	Operating pressure differential (PSI) Min.	Max. Air AC	Max. Air DC	Max. liquid AC	Max. liquid DC	Max. Light oil ≤20CST AC	Max. Light oil ≤20CST DC	Max. Temp. ℃	Coil Type	Power consumption VA AC 110V	Power consumption W DC 24V	Coil Class	Model Code 110VAC NPT	Weight (KG)
1/4"	10	1.9	0	290	230	290	230	290	230	80	D	20	17	H	UZS1DH01N4B10N	0.55
	10	1.9	0	290	230	290	230			120	D	20	17	H	UZS1DH01E4B10N	0.55
	10	1.9	0	290	230	290	230	290	230	120	D	20	17	H	UZS1DH01V4B10N	0.55
3/8"	10	2.4	0	290	230	290	230	290	230	80	D	20	17	H	UZS1DH01N4C10N	0.54
	10	2.4	0	290	230	290	230			120	D	20	17	H	UZS1DH01E4C10N	0.54
	10	2.4	0	290	230	290	230	290	230	120	D	20	17	H	UZS1DH01V4C10N	0.54
	13	3.1	0	230	175	230	175	230	175	80	D	20	17	H	UZS1DH01N4C13N	0.56
	13	3.1	0	230	175	230	175			120	D	20	17	H	UZS1DH01E4C13N	0.56
	13	3.1	0	230	175	230	175	230	175	120	D	20	17	H	UZS1DH01V4C13N	0.56
1/2"	10	2.4	0	290	230	290	230	290	230	80	D	20	17	H	UZS1DH01N4D10N	0.53
	10	2.4	0	290	230	290	230			120	D	20	17	H	UZS1DH01E4D10N	0.53
	10	2.4	0	290	230	290	230	290	230	120	D	20	17	H	UZS1DH01V4D10N	0.53
	13	3.1	0	230	175	230	175	230	175	80	D	20	17	H	UZS1DH01N4D13N	0.55
	13	3.1	0	230	175	230	175			120	D	20	17	H	UZS1DH01E4D13N	0.55
	13	3.1	0	230	175	230	175	230	175	120	D	20	17	H	UZS1DH01V4D13N	0.55
	16	4.0	0	175	145	175	145	175	145	80	D	20	17	H	UZS1DH01N4D16N	0.76
	16	4.0	0	175	145	175	145			120	D	20	17	H	UZS1DH01E4D16N	0.76
	16	4.0	0	175	145	175	145	175	145	120	D	20	17	H	UZS1DH01V4D16N	0.76
3/4"	16	4.0	0	175	145	175	145	175	145	80	D	20	17	H	UZS1DH01N4E16N	0.74
	16	4.0	0	175	145	175	145			120	D	20	17	H	UZS1DH01E4E16N	0.74
	16	4.0	0	175	145	175	145	175	145	120	D	20	17	H	UZS1DH01V4E16N	0.74
	20	5.6	0	145	145	145	145	145	145	80	D	20	17	H	UZS1DH01N4E20N	1.0
	20	5.6	0	145	145	145	145			120	D	20	17	H	UZS1DH01E4E20N	1.0
	20	5.6	0	145	145	145	145	145	145	120	D	20	17	H	UZS1DH01V4E20N	1.0
1"	20	5.6	0	145	145	145	145	145	145	80	D	20	17	H	UZS1DH01N4G20N	0.9
	20	5.6	0	145	145	145	145			120	D	20	17	H	UZS1DH01E4G20N	0.9
	20	5.6	0	145	145	145	145	145	145	120	D	20	17	H	UZS1DH01V4G20N	0.9

UZS Series 2/2-Way Large Diameter Direct Acting Solenoid Valve

2-Way normally closed solenoid valve, Closed when de-energized, open when energized.

Ambient Temp.:-10℃~65℃ Fluids Temp. :0℃~120℃

Voltage: AC110V/50Hz ; AC120/60Hz;
AC220V/50Hz ; AC240V/60Hz,
AC230V 50/60Hz ; AC36V 50/60Hz;
AC24V 50/60Hz ; DC24V ; DC12V ±10%

Flow as the arrow, mounts in any position; Best position is Solenoid vertical and upright direction.

Can choose NSF certificate solenoid valve



External Dimensions

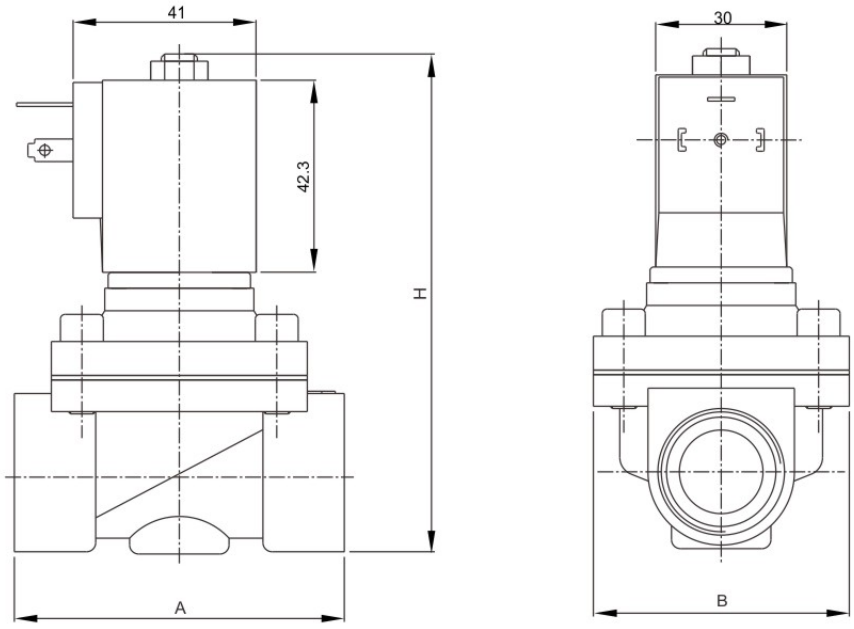

UZS Series 2/2-Way Large Diameter Direct Acting Solenoid Valve <*Normally Closed*>

Valve Selection List

Pipe Conn -ection	Orifice mm	CV Factor	Operating pressure differential (PSI) Min.	Max. Air AC	Max. Air DC	Max. liquid AC	Max. liquid DC	Max. Light oil ≤20CST AC	Max. Light oil ≤20CST DC	Max. Temp. ℃	Coil Type	Power consumption VA AC 110V	Power consumption W DC 24V	Coil Class	External Dimensions Length x Width x Height L x B x H	Model Code 220VAC	Weight (KG)
3/8 "	16	4.8	0	145	90	145	90	100	60	80	D	20	17	H	69×57×106	UZS1DH01N1C16N	0.8
	16	4.8	0	145	90	145	90			120	D	20	17	H	69×57×106	UZS1DH01E1C16N	0.8
	16	4.8	0	145	90	145	90	100	60	120	D	20	17	H	69×57×106	UZS1DH01V1C16N	0.8
	16	4.8	0			45	45			120	D	20	17	H	69×57×106	UZS1DH01G1C16N	0.8
1/2 "	16	4.8	0	145	90	145	90	100	60	80	D	20	17	H	69×57×106	UZS1DH01N1D16N	0.8
	16	4.8	0	145	90	145	90			120	D	20	17	H	69×57×106	UZS1DH01E1D16N	0.8
	16	4.8	0	145	90	145	90	100	60	120	D	20	17	H	69×57×106	UZS1DH01V1D16N	0.8
	16	4.8	0			45	45			120	D	20	17	H	69×57×106	UZS1DH01G1D16N	0.8
3/4 "	20	7.6	0	145	90	145	90	100	60	80	D	20	17	H	73×57×114	UZS1DH01N1E20N	1
	20	7.6	0	145	90	145	90			120	D	20	17	H	73×57×114	UZS1DH01E1E20N	1
	20	7.6	0	145	90	145	90	100	60	120	D	20	17	H	73×57×114	UZS1DH01V1E20N	1
	20	7.6	0			45	45			120	D	20	17	H	73×57×114	UZS1DH01G1E20N	1
1 "	20	7.6	0	145	90	145	90	100	60	80	D	20	17	H	80×62×117	UZS1DH01N1G20N	1.1
	20	7.6	0	145	90	145	90			120	D	20	17	H	80×62×117	UZS1DH01E1G20N	1.1
	20	7.6	0	145	90	145	90	100	60	120	D	20	17	H	80×62×117	UZS1DH01V1G20N	1.1
	20	7.6	0			45	45			120	D	20	17	H	80×62×117	UZS1DH01G1G20N	1.1
	25	12	0	145	90	145	90	100	60	80	D	20	17	H	99×77×121	UZS1DH01N1G25N	1.3
	25	12	0	145	90	145	90			120	D	20	17	H	99×77×121	UZS1DH01E1G25N	1.3
	25	12	0	145	90	145	90	100	60	120	D	20	17	H	99×77×121	UZS1DH01V1G25N	1.3
	25	12	0			45	45			120	D	20	17	H	99×77×121	UZS1DH01G1G25N	1.3

UZS Series 2/2-Way Large Diameter Direct Acting Solenoid Valve

2-Way normally closed solenoid valve, Closed when de-energized, open when energized.

Ambient Temp：-10-65℃ Fluids Temp:0℃~120℃

Voltage：AC110V/50Hz ; AC120/60Hz;
AC220V/50Hz； AC240V/60Hz,
AC230V 50/60Hz; AC36V 50/60Hz;
AC24V 50/60Hz;DC24V;DC12V ±10%

Flow as the arrow, mounts in any position; Best position is Solenoid vertical and upright direction.



External Dimensions

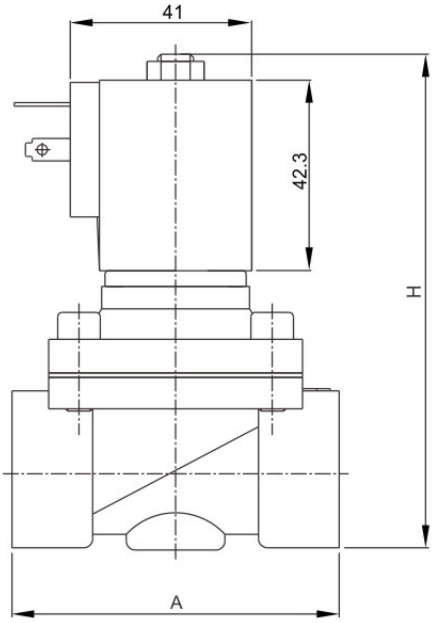

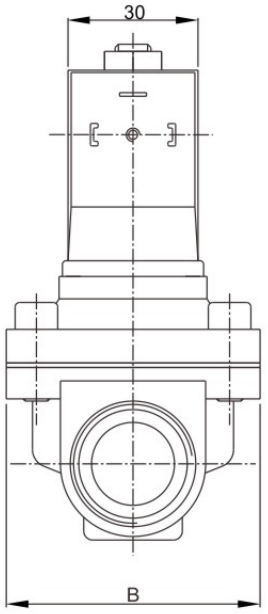

UZS Series 2/2-Way Large Diameter Direct Acting Solenoid Valve <*Normally Closed*>

Valve Selection List

Pipe Conn -ection NPT	Orifice mm	CV Factor	Operating pressure differential (PSI) Min.	Max. Air AC	Max. Air DC	Max. liquid AC	Max. liquid DC	Max. Light oil ≤20CST AC	Max. Light oil ≤20CST DC	Max. Temp. ℃	Coil Type	Power consumption VA AC 110V	Power consumption W DC 24V	Coil Class	External Dimensions Length x Width x Height L x B x H	Model Code 110VAC NPT	Weight (KG)
3/8 "	16	4.8	0	145	90	145	90	100	60	80	D	20	17	H	69×57×106	UZS1DH01N4C16N	0.8
	16	4.8	0	145	90	145	90			120	D	20	17	H	69×57×106	UZS1DH01E4C16N	0.8
	16	4.8	0	145	90	145	90	100	60	120	D	20	17	H	69×57×106	UZS1DH01V4C16N	0.8
	16	4.8	0			45	45			120	D	20	17	H	69×57×106	UZS1DH01G4C16N	0.8
1/2 "	16	4.8	0	145	90	145	90	100	60	80	D	20	17	H	69×57×106	UZS1DH01N4D16N	0.8
	16	4.8	0	145	90	145	90			120	D	20	17	H	69×57×106	UZS1DH01E4D16N	0.8
	16	4.8	0	145	90	145	90	100	60	120	D	20	17	H	69×57×106	UZS1DH01V4D16N	0.8
	16	4.8	0			45	45			120	D	20	17	H	69×57×106	UZS1DH01G4D16N	0.8
3/4 "	20	7.6	0	145	90	145	90	100	60	80	D	20	17	H	73×57×114	UZS1DH01N4E20N	1
	20	7.6	0	145	90	145	90			120	D	20	17	H	73×57×114	UZS1DH01E4E20N	1
	20	7.6	0	145	90	145	90	100	60	120	D	20	17	H	73×57×114	UZS1DH01V4E20N	1
	20	7.6	0			45	45			120	D	20	17	H	73×57×114	UZS1DH01G4E20N	1
1 "	20	7.6	0	145	90	145	90	100	60	80	D	20	17	H	80×62×117	UZS1DH01N4G20N	1.1
	20	7.6	0	145	90	145	90			120	D	20	17	H	80×62×117	UZS1DH01E4G20N	1.1
	20	7.6	0	145	90	145	90	100	60	120	D	20	17	H	80×62×117	UZS1DH01V4G20N	1.1
	20	7.6	0			45	45			120	D	20	17	H	80×62×117	UZS1DH01G4G20N	1.1
	25	12	0	145	90	145	90	100	60	80	D	20	17	H	99×77×121	UZS1DH01N4G25N	1.3
	25	12	0	145	90	145	90			120	D	20	17	H	99×77×121	UZS1DH01E4G25N	1.3
	25	12	0	145	90	145	90	100	60	120	D	20	17	H	99×77×121	UZS1DH01V4G25N	1.3
	25	12	0			45	45			120	D	20	17	H	99×77×121	UZS1DH01G4G25N	1.3

2-Way normally closed solenoid valve, Closed when de-energized, open when energized.

Ambient Temp. -10℃~65℃ Fluids Temp:0℃~120℃

Voltage: AC110V/50Hz ; AC120/60Hz;
AC220V/50Hz; AC240V/60Hz,
AC230V 50/60Hz; AC36V 50/60Hz;
AC24V 50/60Hz;DC24V;DC12V ±10%

Flow as the arrow, mounts in any position; Best position is Solenoid vertical and upright direction.



External Dimensions

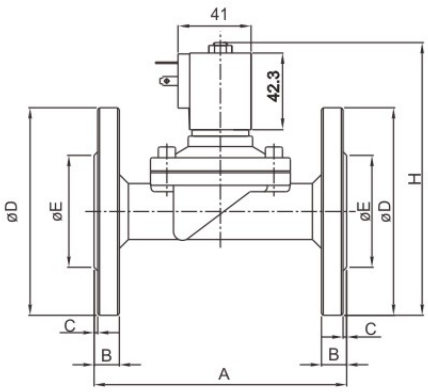

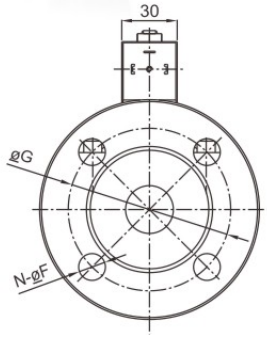

Model	A	B	C	øD	øE	N–øH	øG	H
UZS-15BF	106	12	2	95	45	4-14	65	135
UZS-20BF	106	12	2	102	56	4-14	75	138
UZS-25BF	140	14	2	115	62	4-14	85	151

Valve Selection List

Orifice mm	CV Factor	Operating pressure differential (PSI)							Max. Temp. ℃	Coil Type	Power consumption		Coil Class	Model Code 110VAC	Weight (KG)
		Min.	Max.								VA	W			
			Air		liquid		Light oil ≤20CST				AC 110V	DC 24V			
			AC	DC	AC	DC	AC	DC							
15	4.8	0	115	90	115	90	75	45	80	D	20	17	H	UZS1DH01N4F15	1.7
15	4.8	0	115	90	115	90			120	D	20	17	H	UZS1DH01E4F15	1.7
15	4.8	0	115	90	115	90	75	45	120	D	20	17	H	UZS1DH01V4F15	1.7
15	4.8	0	45	45	45	45	75	45	120	D	20	17	H	UZS1DH01G4F15	1.7
20	7.6	0	115	90	115	90	75	45	80	D	20	17	H	UZS1DH01N4F20	1.9
20	7.6	0	115	90	115	90			120	D	20	17	H	UZS1DH01E4F20	1.9
20	7.6	0	115	90	115	90	75	45	120	D	20	17	H	UZS1DH01V4F20	1.9
20	7.6	0	45	45	45	45	75	45	120	D	20	17	H	UZS1DH01G4F20	1.9
25	12	0	115	90	115	90	75	45	80	D	20	17	H	UZS1DH01N4F25	2.8
25	12	0	115	90	115	90			120	D	20	17	H	UZS1DH01E4F25	2.8
25	12	0	115	90	115	90	75	45	120	D	20	17	H	UZS1DH01V4F25	2.8
25	12	0	45	45	45	45	75	45	120	D	20	17	H	UZS1DH01G4F25	2.8

UZS Plastic Series 2/2-Way Zero Press Differential Solenoid Valve <*Normally Closed*>

2- Way normally closed solenoids valve Closed when de-energized, open when energized

Body material: Nylon(PA6)

Max pressure: 145PSI

Ambient temp: -10-65℃ Fluids Temp: 0-80℃

Voltage: AC110V/50Hz ; AC120/60Hz;
AC220V/50Hz; AC240V/60Hz,
AC230V 50/60Hz; AC36V 50/60Hz;
AC24V 50/60Hz;DC24V;DC12V ± 10%

Flow as the arrow, mounts in any position; Best position is
Solenoid vertical and upright direction.



External Dimensions

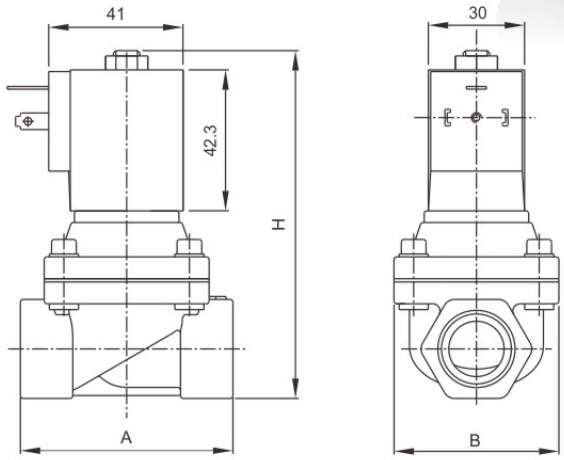

Valve Selection List

Pipe Connection NPT	Orifice mm	Operating pressure differential (PSI) CV Factor	Min.	Max. Air AC	Max. Air DC	Max. liquid AC	Max. liquid DC	Max. Temp. ℃	Coil Type	Power consumption VA AC 110V	Power consumption W DC 24V	Coil Class	External Dimensions Length x Width x Height L x B x H	Model Code 110VAC G thread	Weight (KG)
1/2"	15	4.8	0	115	90	115	90	80	D	20	17	H	69×57×106	UZS1DH01N7D15	0.35
	15	4.8	0	115	90	115	90	80	D	20	17	H	69×57×106	UZS1DH01E7D15	0.35
	15	4.8	0	115	90	115	90	80	D	20	17	H	69×57×106	UZS1DH01V7D15	0.35
	15	4.8	0	45	45	45	45	80	D	20	17	H	69×57×106	UZS1DH01G7D15	0.35
3/4"	20	7.6	0	115	90	115	90	80	D	20	17	H	73×57×114	UZS1DH01N7E20	0.4
	20	7.6	0	115	90	115	90	80	D	20	17	H	73×57×114	UZS1DH01E7E20	0.4
	20	7.6	0	115	90	115	90	80	D	20	17	H	73×57×114	UZS1DH01V7E20	0.4
	20	7.6	0	45	45	45	45	80	D	20	17	H	73×57×114	UZS1DH01G7E20	0.4
1"	25	12	0	115	90	115	90	80	D	20	17	H	99×92×117	UZS1DH01N7G25	0.5
	25	12	0	115	90	115	90	80	D	20	17	H	99×92×117	UZS1DH01E7G25	0.5
	25	12	0	115	90	115	90	80	D	20	17	H	99×92×117	UZS1DH01V7G25	0.5
	25	12	0	45	45	45	45	80	D	20	17	H	99×92×117	UZS1DH01G7G25	0.5

1	2	3	4	5	6	7	8	9	10
Valve Series	Mode of Operation	Coil Type	Coil Class	Voltage	Seal Material	Body Material	Pipe Size	Orifice (mm)	Options
USLP	1	D	H	01	N	1	E	20	N
	1= Normally Closed 2= Normally Open	D=DIN Standard Connections, Fully Encapsulated	H=H Class (UL)	01= AC110V 50Hz/ AC120V 60Hz 02= AC220V 50Hz/ AC240V 60Hz 03=AC36V 05=AC24V 20=AC230V 50/60Hz 12=DC12V 13=DC24V	N=NBR E=EPDM V=VITON	1=Forged Brass 3=SS316 4=SS304 7=Nylon	A=1/8" B=1/4"	03=3.0 04=4.0 05=5.0 06=6.0	M=Manual Override L=Neon lamp K=Mounting Bracket N=NPT thread P=PT R=RC RP=RP Blank is G thread
							C=3/8" D=1/2"	05=5.0 06=6.0	
							C=3/8"	03=3.0 04=4.0	
							B=1/4" C=3/8" D=1/2"	10=10.0 C9=10.5 13=13.0	
							E=3/4"	20=20.0	
							G=1"	20=20.0 25=25.0	
							H=1 1/4"	32=32.0	
							J=1 1/2"	40=40.0	
							K=2"	40=40.0 50=50.0	
							F=Flange Connection	25=25.0 35=35.0 40=40.0 50=50.0	
						9=Forged Brass 5=Stainless Steel	A=1/8" B=1/4"	01=1.0 C2=1.5 C3=2.5 03=3.0 04=4.0	

USLP Series Compact Series 2/2-Way Direct Acting Solenoid Valve <*Normally Closed*>

2-Way normally closed solenoid valve, Closed when de-energized, open when energized.

Body material: forged brass.316 stainless steel.

Ambient Temp. -10℃~65℃, Fluids Temp 0℃~120℃

Voltage: AC110V/50Hz ; AC120/60Hz;AC220V/50Hz; AC240V/60Hz,AC230V 50/60Hz;
AC36V 50/60Hz;AC24V 50/60Hz;DC24V;DC12V ±10%

Flow as the arrow, mounts in any position; best position is upright direction

Brass body can choose NSF certificate solenoid valve

Construction, External Dimensions Chart

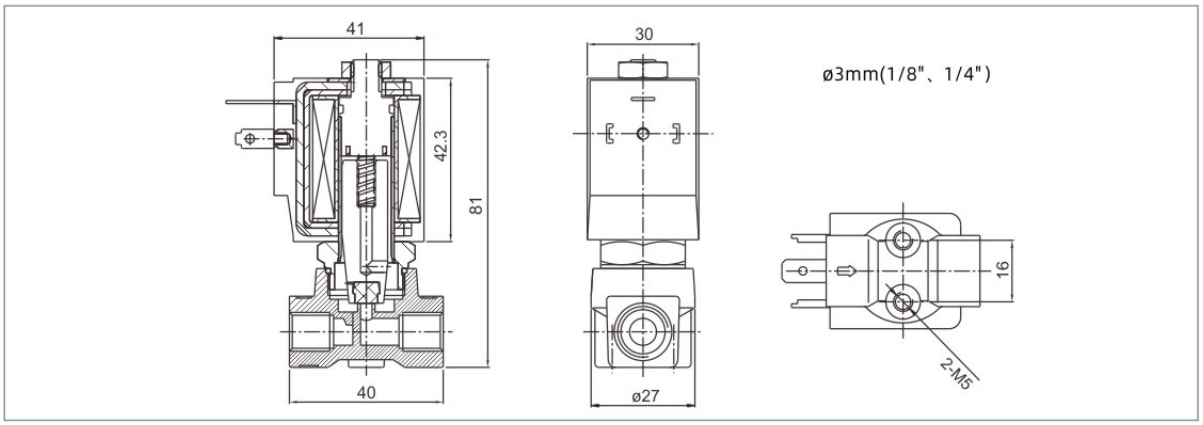

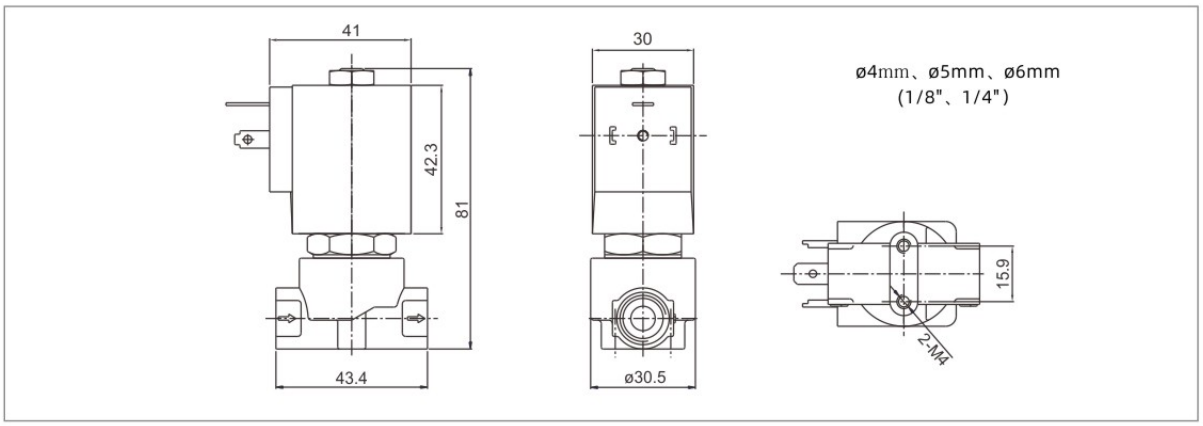

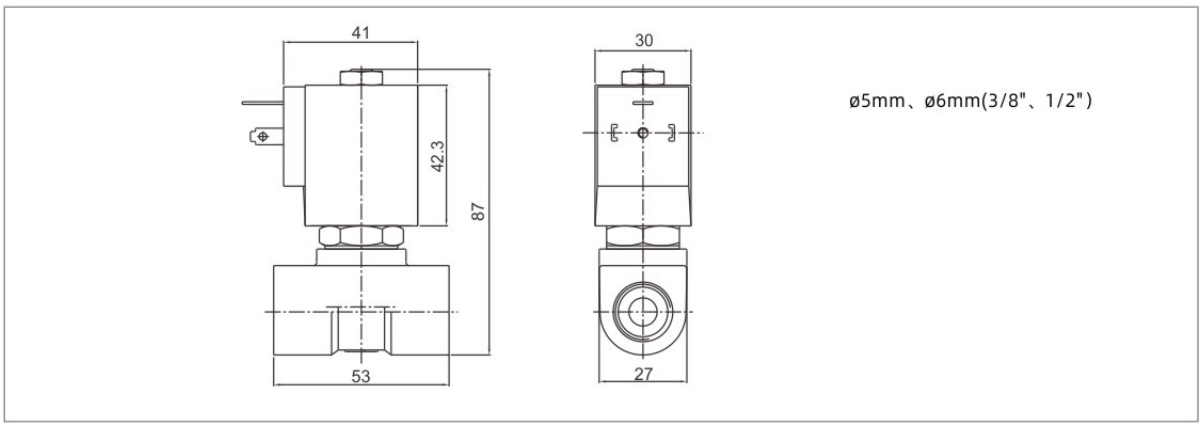

USLP Series Compact Series 2/2-Way Direct Acting Solenoid Valve







Valve Selection List

Pipe Conn-ection NPT	Orifice mm	CV Factor	Operating pressure differential (PSI) Min.	Max. Air Gas AC	Max. Air Gas DC	Max. Water Hot water Liquids AC	Max. Water Hot water Liquids DC	Max. Light oil ≤ 20CST AC	Max. Light oil ≤ 20CST DC	Max. fluids Temp. ℃	Coil Type	Power consumption VA AC 110V	Power consumption W DC 24V	Coil Class	Model Code 110VAC NPT Body material Forged brass	Model Code 110VAC NPT Body material SS316	Weight KG
1/8″	3	0.25	0	190	190	190	190	145	145	80	D	20	17	H	USLP1DH01N1A03N	USLP1DH01N3A03N	0.37
	3	0.25	0	190	190	190	190			120	D	20	17	H	USLP1DH01E1A03N	USLP1DH01E3A03N	0.37
	3	0.25	0	190	190	190	190	145	145	120	D	20	17	H	USLP1DH01V1A03N	USLP1DH01V3A03N	0.37
	4	0.4	0	115	115	115	115	90	90	80	D	20	17	H	USLP1DH01N1A04N	USLP1DH01N3A04N	0.37
	4	0.4	0	115	115	115	115			120	D	20	17	H	USLP1DH01E1A04N	USLP1DH01E3A04N	0.37
	4	0.4	0	115	115	115	115	90	90	120	D	20	17	H	USLP1DH01V1A04N	USLP1DH01V3A04N	0.37
	5	0.65	0	60	40	60	40	40	30	80	D	20	17	H	USLP1DH01N1A05N	USLP1DH01N3A05N	0.36
	5	0.65	0	60	40	60	40			120	D	20	17	H	USLP1DH01E1A05N	USLP1DH01E3A05N	0.36
	5	0.65	0	60	40	60	40	40	30	120	D	20	17	H	USLP1DH01V1A05N	USLP1DH01V3A05N	0.36
	6	0.8	0	45	30	45	30	40	30	80	D	20	17	H	USLP1DH01N1A06N	USLP1DH01N3A06N	0.36
	6	0.8	0	45	30	45	30			120	D	20	17	H	USLP1DH01E1A06N	USLP1DH01E3A06N	0.36
	6	0.8	0	45	30	45	30	40	30	120	D	20	17	H	USLP1DH01V1A06N	USLP1DH01V3A06N	0.36
1/4″	3	0.25	0	190	190	190	190	145	145	80	D	20	17	H	USLP1DH01N1B03N	USLP1DH01N3B03N	0.36
	3	0.25	0	190	190	190	190			120	D	20	17	H	USLP1DH01E1B03N	USLP1DH01E3B03N	0.36
	3	0.25	0	190	190	190	190	145	145	120	D	20	17	H	USLP1DH01V1B03N	USLP1DH01V3B03N	0.36
	4	0.4	0	115	115	115	115	90	90	80	D	20	17	H	USLP1DH01N1B04N	USLP1DH01N3B04N	0.35
	4	0.4	0	115	115	115	115			120	D	20	17	H	USLP1DH01E1B04N	USLP1DH01E3B04N	0.35
	4	0.4	0	115	115	115	115	90	90	120	D	20	17	H	USLP1DH01V1B04N	USLP1DH01V3B04N	0.35
	5	0.65	0	60	40	60	40	40	30	80	D	20	17	H	USLP1DH01N1B05N	USLP1DH01N3B05N	0.35
	5	0.65	0	60	40	60	40			120	D	20	17	H	USLP1DH01E1B05N	USLP1DH01E3B05N	0.35
	5	0.65	0	60	40	60	40	40	30	120	D	20	17	H	USLP1DH01V1B05N	USLP1DH01V3B05N	0.35
	6	0.8	0	45	30	45	30	40	30	80	D	20	17	H	USLP1DH01N1B06N	USLP1DH01N3B06N	0.35
	6	0.8	0	45	30	45	30			120	D	20	17	H	USLP1DH01E1B06N	USLP1DH01E3B06N	0.35
	6	0.8	0	45	30	45	30	40	30	120	D	20	17	H	USLP1DH01V1B06N	USLP1DH01V3B06N	0.35
3/8″	5	0.65	0	60	40	60	40	40	30	80	D	20	17	H	USLP1DH01N1C05N	USLP1DH01N3C05N	0.46
	5	0.65	0	60	40	60	40			120	D	20	17	H	USLP1DH01E1C05N	USLP1DH01E3C05N	0.46
	5	0.65	0	60	40	60	40	40	30	120	D	20	17	H	USLP1DH01V1C05N	USLP1DH01V3C05N	0.46
	6	0.8	0	45	30	45	30	40	30	80	D	20	17	H	USLP1DH01N1C06N	USLP1DH01N3C06N	0.43
	6	0.8	0	45	30	45	30			120	D	20	17	H	USLP1DH01E1C06N	USLP1DH01E3C06N	0.43
	6	0.8	0	45	30	45	30	40	30	120	D	20	17	H	USLP1DH01V1C06N	USLP1DH01V3C06N	0.43
1/2″	5	0.65	0	60	40	60	40	40	30	80	D	20	17	H	USLP1DH01N1D05N	USLP1DH01N3D05N	0.46
	5	0.65	0	60	40	60	40			120	D	20	17	H	USLP1DH01E1D05N	USLP1DH01E3D05N	0.46
	5	0.65	0	60	40	60	40	40	30	120	D	20	17	H	USLP1DH01V1D05N	USLP1DH01V3D05N	0.46
	6	0.8	0	45	30	45	30	40	30	80	D	20	17	H	USLP1DH01N1D06N	USLP1DH01N3D06N	0.43
	6	0.8	0	45	30	45	30			120	D	20	17	H	USLP1DH01E1D06N	USLP1DH01E3D06N	0.43
	6	0.8	0	45	30	45	30	40	30	120	D	20	17	H	USLP1DH01V1D06N	USLP1DH01V3D06N	0.43

USLP Small Series 2/2-Way Direct Acting Solenoid Valve <Normally Closed>

2/2 way normally closed , closed when de-energized , open when energized

Body material: forged brass.316 stainless steel.

Ambient Temp:-10℃~65℃, Fluids Temp:0℃~120℃

Voltage: AC110V/50Hz ; AC120/60Hz;AC220V/50Hz;
AC240V/60Hz,AC230V 50/60Hz; AC36V 50/60Hz;
AC24V 50/60Hz;DC24V;DC12V ±10%

Flow as the arrow, mounts in any position;
best position is upright direction

Brass body can choose NSF certificate solenoid valve





External Dimensions

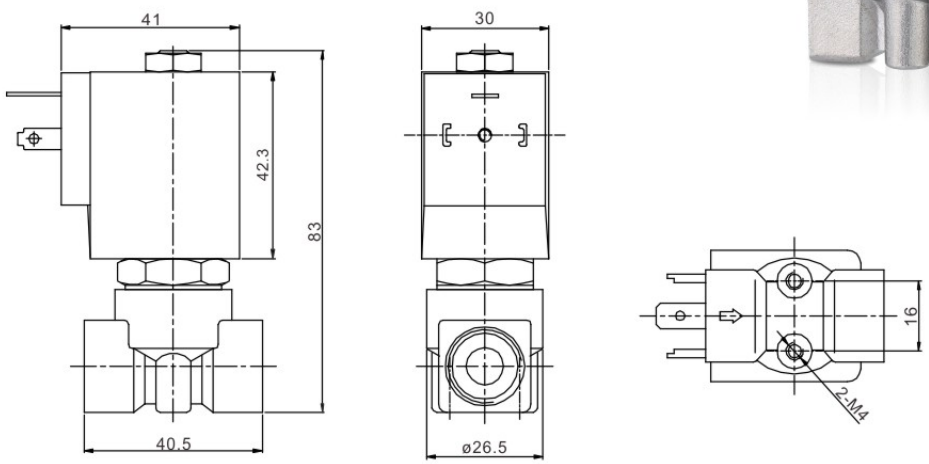

Valve Selection List

Pipe Connection NPT	Orifice mm	CV Factor	Operating pressure differential (PSI) Min.	Max. AC (Air liquid)	Max. DC (Air liquid)	Max. AC (Light oil ≤20CST)	Max. DC (Light oil ≤20CST)	Max. Temp. ℃	Coil Type	Power consumption VA AC 110V	Power consumption W DC 24V	Coil Class	Model Code 110VAC NPT Body material: Forged brass	Model Code 110VAC NPT Body material: SS316	Weight KG
3/8"	3	0.25	0	190	190	145	145	80	D	20	17	H	USLP1DH01N1C03N	USLP1DH01N3C03N	0.34
	3	0.25	0	190	190			120	D	20	17	H	USLP1DH01E1C03N	USLP1DH01E3C03N	0.34
	3	0.25	0	190	190	145	145	120	D	20	17	H	USLP1DH01V1C03N	USLP1DH01V3C03N	0.34
	4	0.4	0	115	115	90	90	80	D	20	17	H	USLP1DH01N1C04N	USLP1DH01N3C04N	0.34
	4	0.4	0	115	115			120	D	20	17	H	USLP1DH01E1C04N	USLP1DH01E3C04N	0.34
	4	0.4	0	115	115	90	90	120	D	20	17	H	USLP1DH01V1C04N	USLP1DH01V3C04N	0.34

USLP Compact Series 2/2-Way Direct Acting Solenoid Valve

2-Way normally open solenoid valve,Open when de-energized, Closed when energized.

Serialized products, small in size, high flow rate, wide usage

Body material: forged brass.316 stainless steel.

Ambient Temp:-10℃~65℃, Fluids Temp:0℃~120℃.

Voltage: AC110V/50Hz ; AC120/60Hz;
AC220V/50Hz; AC240V/60Hz,
AC230V 50/60Hz; AC36V 50/60Hz;
AC24V 50/60Hz;DC24V;DC12V ±10%

Flow as the arrow, mounts in any position;
best position is upright direction

Brass body can choose NSF certificate solenoid valve





Normally open **De-energized** **Open**



Energized **Closed**

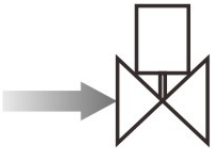

External Dimensions

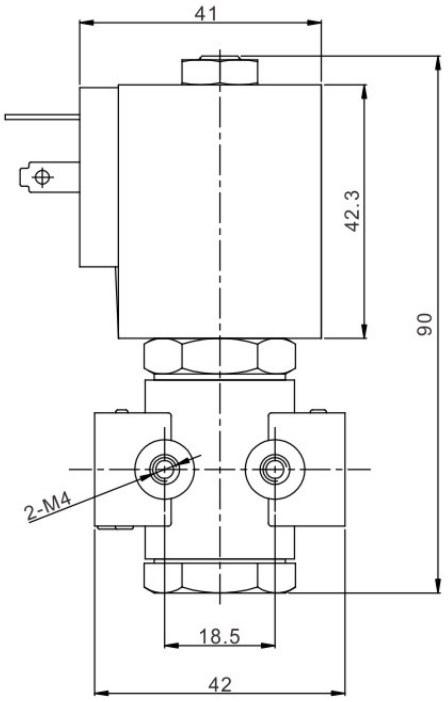

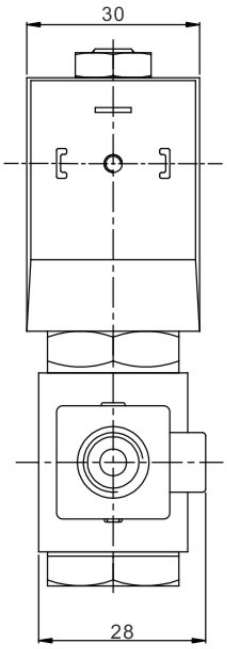

USLP Compact Series 2/2-Way Direct Acting Solenoid Valve <Normally Open>

Valve Selection List

Pipe Connection NPT	Orifice mm	CV Factor	Operating pressure differential (PSI) Min.	Max. Air	Max. Liquids	Max. Light oil ≤ 20 CST	Max. fluids Temp. ℃	Coil Type	consumption VA AC 110V	consumption W DC 24V	Coil Class	Model Code 110VAC NPT Body material: Forged brass	Model Code 110VAC NPT Body material: SS316	Weight (KG)
1/8"	1	0.04	0	435	435	365	80	D	20	17	H	USLP2DH01N9A01N	USLP2DH01N5A01N	0.4
	1	0.04	0	435	435		120	D	20	17	H	USLP2DH01E9A01N	USLP2DH01E5A01N	0.4
	1	0.04	0	435	435	365	120	D	20	17	H	USLP2DH01V9A01N	USLP2DH01V5A01N	0.4
	1.5	0.09	0	290	290	220	80	D	20	17	H	USLP2DH01N9AC2N	USLP2DH01N5AC2N	0.4
	1.5	0.09	0	290	290		120	D	20	17	H	USLP2DH01E9AC2N	USLP2DH01E5AC2N	0.4
	1.5	0.09	0	290	290	220	120	D	20	17	H	USLP2DH01V9AC2N	USLP2DH01V5AC2N	0.4
	2.5	0.2	0	220	220	175	80	D	20	17	H	USLP2DH01N9AC3N	USLP2DH01N5AC3N	0.4
	2.5	0.2	0	220	220		120	D	20	17	H	USLP2DH01E9AC3N	USLP2DH01E5AC3N	0.4
	2.5	0.2	0	220	220	175	120	D	20	17	H	USLP2DH01V9AC3N	USLP2DH01V5AC3N	0.4
	3	0.25	0	175	175	145	80	D	20	17	H	USLP2DH01N9A03N	USLP2DH01N5A03N	0.4
	3	0.25	0	175	175		120	D	20	17	H	USLP2DH01E9A03N	USLP2DH01E5A03N	0.4
	3	0.25	0	175	175	145	120	D	20	17	H	USLP2DH01V9A03N	USLP2DH01V5A03N	0.4
	4	0.4	0	75	75	60	80	D	20	17	H	USLP2DH01N9A04N	USLP2DH01N5A04N	0.39
	4	0.4	0	75	75		120	D	20	17	H	USLP2DH01E9A04N	USLP2DH01E5A04N	0.39
	4	0.4	0	75	75	60	120	D	20	17	H	USLP2DH01V9A04N	USLP2DH01V5A04N	0.39
1/4"	1	0.04	0	435	435	365	80	D	20	17	H	USLP2DH01N9B01N	USLP2DH01N5B01N	0.39
	1	0.04	0	435	435		120	D	20	17	H	USLP2DH01E9B01N	USLP2DH01E5B01N	0.39
	1	0.04	0	435	435	365	120	D	20	17	H	USLP2DH01V9B01N	USLP2DH01V5B01N	0.39
	1.5	0.09	0	290	290	220	80	D	20	17	H	USLP2DH01N9BC2N	USLP2DH01N5BC2N	0.39
	1.5	0.09	0	290	290		120	D	20	17	H	USLP2DH01E9BC2N	USLP2DH01E5BC2N	0.39
	1.5	0.09	0	290	290	220	120	D	20	17	H	USLP2DH01V9BC2N	USLP2DH01V5BC2N	0.39
	2.5	0.2	0	220	220	175	80	D	20	17	H	USLP2DH01N9BC3N	USLP2DH01N5BC3N	0.39
	2.5	0.2	0	220	220		120	D	20	17	H	USLP2DH01E9BC3N	USLP2DH01E5BC3N	0.39
	2.5	0.2	0	220	220	175	120	D	20	17	H	USLP2DH01V9BC3N	USLP2DH01V5BC3N	0.39
	3	0.25	0	175	175	145	80	D	20	17	H	USLP2DH01N9B03N	USLP2DH01N5B03N	0.45
	3	0.25	0	175	175		120	D	20	17	H	USLP2DH01E9B03N	USLP2DH01E5B03N	0.45
	3	0.25	0	175	175	145	120	D	20	17	H	USLP2DH01V9B03N	USLP2DH01V5B03N	0.45
	4	0.4	0	75	75	60	80	D	20	17	H	USLP2DH01N9B04N	USLP2DH01N5B04N	0.38
	4	0.4	0	75	75		120	D	20	17	H	USLP2DH01E9B04N	USLP2DH01E5B04N	0.38
	4	0.4	0	75	75	60	120	D	20	17	H	USLP2DH01V9B04N	USLP2DH01V5B04N	0.38

USLP Small Series 2/2-Way Pilot Operated Solenoid Valve

2-Way normally closed solenoid valve, Closed when de-energized, open when energized.

Serialized products, small in size, high flow rate, wide usage

Body material: forged brass.Orifice: ϕ 10.5mm.

Ambient Temp:-10℃~65℃, Fluids Temp: 0℃~120℃

Voltage: AC110V/50Hz ; AC120/60Hz;AC220V/50Hz;
AC240V/60Hz,AC230V 50/60Hz; AC36V 50/60Hz;
AC24V 50/60Hz;DC24V;DC12V ±10%

Flow as the arrow, mounts in any position;
best position is upright direction

Can choose NSF certificate solenoid valve





External Dimensions

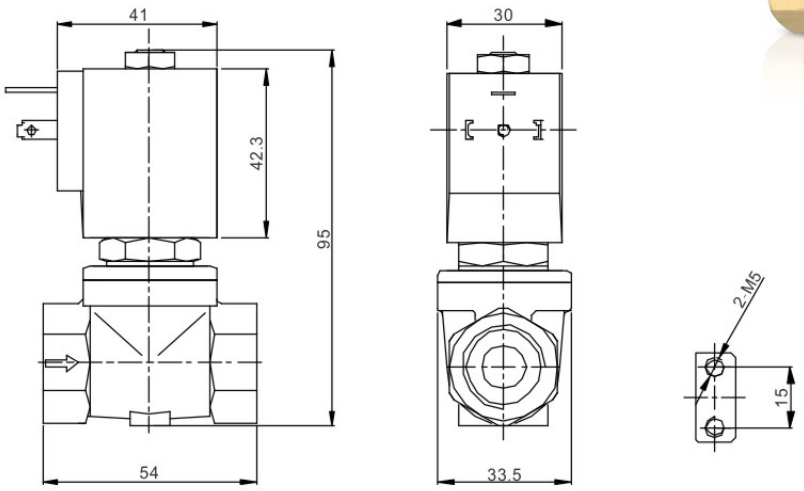

Valve Selection List

Pipe Conn -ection NPT	Orifice mm	CV Factor	Operating pressure differential (PSI) Min.	Max. Air AC	Max. Air DC	Max. Liquids AC	Max. Liquids DC	Max. Light oil ≤ 20CST AC	Max. Light oil ≤ 20CST DC	Max. Temp. ℃	Coil Type	consumption VA AC 110V	consumption W DC 24V	Coil Class	Model Code 110VAC NPT	Weight (KG)
	10.5	1.47	1.5	230	145	230	145	190	145	80	D	20	17	H	USLP1DH01N1BC9N	0.51
1/4″	10.5	1.47	1.5	230	145	230	145			120	D	20	17	H	USLP1DH01E1BC9N	0.51
	10.5	1.47	1.5	230	145	230	145	190	145	120	D	20	17	H	USLP1DH01V1BC9N	0.51
	10.5	1.68	1.5	230	145	230	145	190	145	80	D	20	17	H	USLP1DH01N1CC9N	0.49
3/8″	10.5	1.68	1.5	230	145	230	145			120	D	20	17	H	USLP1DH01E1CC9N	0.49
	10.5	1.68	1.5	230	145	230	145	190	145	120	D	20	17	H	USLP1DH01V1CC9N	0.49
	10.5	1.75	1.5	230	145	230	145	190	145	80	D	20	17	H	USLP1DH01N1DC9N	0.46
1/2″	10.5	1.75	1.5	230	145	230	145			120	D	20	17	H	USLP1DH01E1DC9N	0.46
	10.5	1.75	1.5	230	145	230	145	190	145	120	D	20	17	H	USLP1DH01V1DC9N	0.46

USLP Small Series 2/2-Way Pilot Operated Solenoid Valve <Normally Closed>

2-Way Normally closed solenoid valve,closed when de-energized, open when energized.

Serialized product,small in size,high flow rate,widely use

Body material: SS316 Orifice: Φ9mm

Ambient Temp:-10℃~65℃ Fluids Temp.: 0℃~120℃

Voltage: AC110V/50Hz ; AC120/60Hz;
AC220V/50Hz; AC240V/60Hz,
AC230V 50/60Hz; AC36V 50/60Hz;
AC24V 50/60Hz;DC24V;DC12V ±10%

Flow as the arrow, mounts in any position;
best position is upright direction



External Dimensions

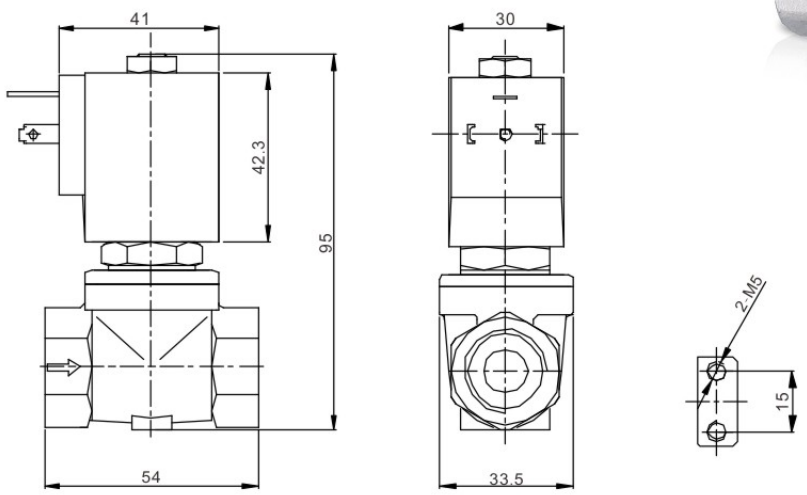

Valve Selection List

Pipe Conn -ection NPT	Orifice mm	CV Factor	Operating pressure differential (PSI) Min.	Max. Air AC	Max. Air DC	Max. Liquids AC	Max. Liquids DC	Max. Light oil ≤ 20CST AC	Max. Light oil ≤ 20CST DC	Max. Temp. ℃	Coil Type	consumption VA AC 110V	consumption W DC 24V	Coil Class	Model Code 110VAC NPT	Weight (KG)
	9	1.2	1.5	230	145	230	145	188.5	145	80	D	20	17	H	USLP1DH01N3BC9N	0.51
1/4″	9	1.2	1.5	230	145	230	145			120	D	20	17	H	USLP1DH01E3BC9N	0.51
	9	1.2	1.5	230	145	230	145	188.5	145	120	D	20	17	H	USLP1DH01V3BC9N	0.51
	9	1.2	1.5	230	145	230	145	188.5	145	80	D	20	17	H	USLP1DH01N3CC9N	0.49
3/8″	9	1.2	1.5	230	145	230	145			120	D	20	17	H	USLP1DH01E3CC9N	0.49
	9	1.2	1.5	230	145	230	145	188.5	145	120	D	20	17	H	USLP1DH01V3CC9N	0.49
	9	1.2	1.5	230	145	230	145	188.5	145	80	D	20	17	H	USLP1DH01N3DC9N	0.46
1/2″	9	1.2	1.5	230	145	230	145			120	D	20	17	H	USLP1DH01E3DC9N	0.46
	9	1.2	1.5	230	145	230	145	188.5	145	120	D	20	17	H	USLP1DH01V3DC9N	0.46

USLP Small Series 2/2-Way Direct Acting Solenoid Valve

2-Way normally closed solenoid valve, Closed when de-energized, open when energized.

Serialized products, small in size, high flow rate, widely use

Body material: forged brass. Orifice: ϕ 10.5mm.

Ambient Temp:-10℃~65℃, Fluids Temp: 0℃~120℃ .

Voltage: AC110V/50Hz ; AC120/60Hz;
AC220V/50Hz; AC240V/60Hz,
AC230V 50/60Hz; AC36V 50/60Hz;
AC24V 50/60Hz;DC24V;DC12V ±10%

Flow as the arrow, mounts in any position;
best position is upright direction

Can choose NSF certificate solenoid valve



External Dimensions

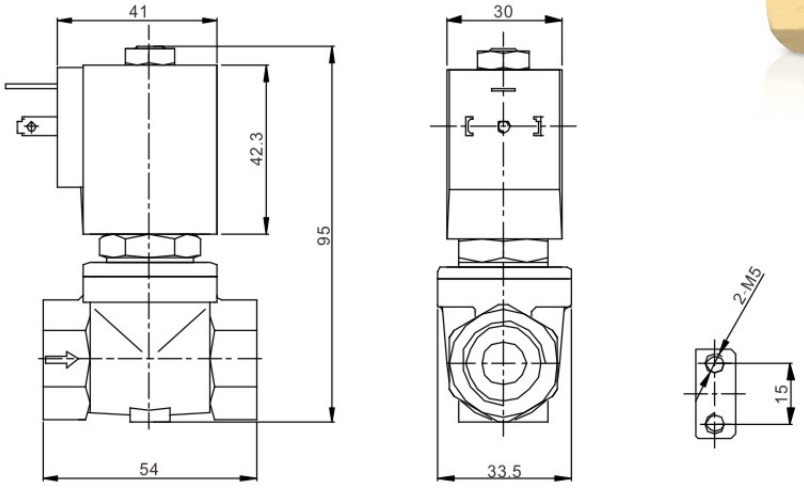

Valve Selection List

Pipe Conn -ection NPT	Orifice mm	CV Factor	Operating pressure differential (PSI) Min.	Max. Air AC	Max. Air DC	Max. Liquids AC	Max. Liquids DC	Max. Light oil ≤ 20CST AC	Max. Light oil ≤ 20CST DC	Max. Temp. ℃	Coil Type	consumption VA AC 110V	consumption W DC 24V	Coil Class	Model Code 110VAC NPT	Weight (KG)
1/4″	10.5	1.47	0	230	145	230	145	190	145	80	D	20	17	H	USLP1DH01N1B10N	0.51
	10.5	1.47	0	230	145	230	145			120	D	20	17	H	USLP1DH01E1B10N	0.51
	10.5	1.47	0	230	145	230	145	190	145	120	D	20	17	H	USLP1DH01V1B10N	0.51
3/8″	10.5	1.68	0	230	145	230	145	190	145	80	D	20	17	H	USLP1DH01N1C10N	0.49
	10.5	1.68	0	230	145	230	145			120	D	20	17	H	USLP1DH01E1C10N	0.49
	10.5	1.68	0	230	145	230	145	190	145	120	D	20	17	H	USLP1DH01V1C10N	0.49
1/2″	10.5	1.75	0	230	145	230	145	190	145	80	D	20	17	H	USLP1DH01N1D10N	0.46
	10.5	1.75	0	230	145	230	145			120	D	20	17	H	USLP1DH01E1D10N	0.46
	10.5	1.75	0	230	145	230	145	190	145	120	D	20	17	H	USLP1DH01V1D10N	0.46

USLP Small Series 2/2-Way Direct Acting Solenoid Valve <Normally Closed>

2-Way Normally closed solenoid valve,closed when de-energized, open when energized.

Serialized product,small in size,high flow rate,widely use

Body material: SS316 Orifice: Φ9mm

Ambient Temp:-10℃~65℃ Fluids Temp.: 0℃~120℃

Voltage: AC110V/50Hz ; AC120/60Hz;
AC220V/50Hz; AC240V/60Hz,
AC230V 50/60Hz; AC36V 50/60Hz;
AC24V 50/60Hz;DC24V;DC12V ±10%

Flow as the arrow, mounts in any position;
best position is upright direction



External Dimensions

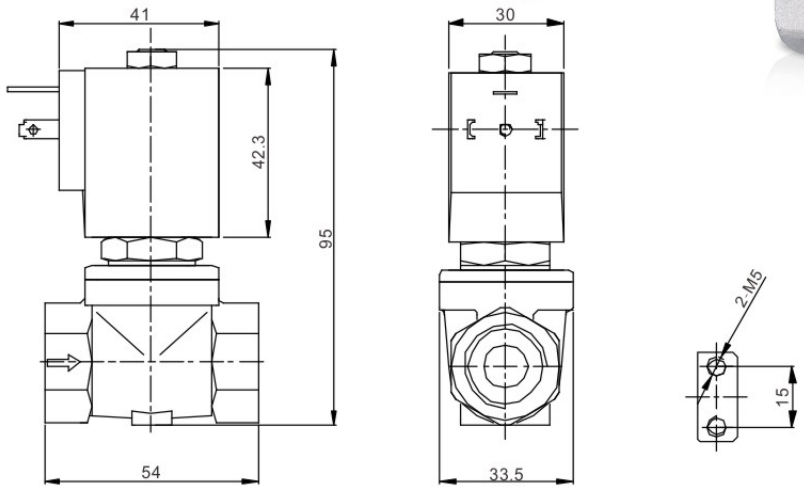

Valve Selection List

Pipe Conn -ection NPT	Orifice mm	CV Factor	Operating pressure differential (PSI) Min.	Max. Air AC	Max. Air DC	Max. Liquids AC	Max. Liquids DC	Max. Light oil ≤ 20CST AC	Max. Light oil ≤ 20CST DC	Max. Temp. ℃	Coil Type	consumption VA AC 110V	consumption W DC 24V	Coil Class	Model Code 110VAC NPT	Weight (KG)
	9	1.2	0	230	145	230	145	190	145	80	D	20	17	H	USLP1DH01N3B10N	0.51
1/4″	9	1.2	0	230	145	230	145			120	D	20	17	H	USLP1DH01E3B10N	0.51
	9	1.2	0	230	145	230	145	190	145	120	D	20	17	H	USLP1DH01V3B10N	0.51
	9	1.2	0	230	145	230	145	190	145	80	D	20	17	H	USLP1DH01N3C10N	0.49
3/8″	9	1.2	0	230	145	230	145			120	D	20	17	H	USLP1DH01E3C10N	0.49
	9	1.2	0	230	145	230	145	190	145	120	D	20	17	H	USLP1DH01V3C10N	0.49
	9	1.2	0	230	145	230	145	190	145	80	D	20	17	H	USLP1DH01N3D10N	0.46
1/2″	9	1.2	0	230	145	230	145			120	D	20	17	H	USLP1DH01E3D10N	0.46
	9	1.2	0	230	145	230	145	190	145	120	D	20	17	H	USLP1DH01V3D10N	0.46

2-Way normally closed solenoid valve, Closed when de-energized, open when energized.

Serialized products, small in size, high flow rate, wide usage

Body material: forged brass. Max. Allowable pressure 290PSI

Ambient Temp:-10℃~65℃ Fluids Temp: 0℃~120℃

Voltage: AC110V/50Hz ; AC120/60Hz;
AC220V/50Hz; AC240V/60Hz,
AC230V 50/60Hz; AC36V 50/60Hz;
AC24V 50/60Hz;DC24V;DC12V ±10%

Flow as the arrow, mounts in any position; best position is upright direction

It can add the signal feedback transmitter

Can choose NSF certificate solenoid valve



Normally closed



Construction, External Dimensions Chart

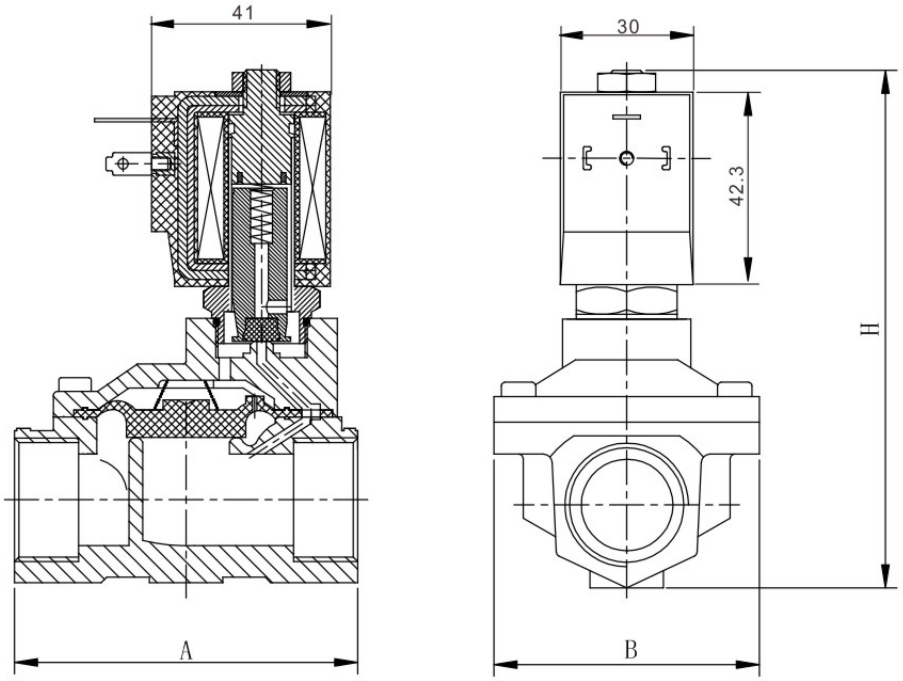

Valve Selection List

Pipe Conn -ection	Orifice mm	CV Factor	Operating pressure differential (PSI) Min.	Max. Air	Max. Liquids	Max. Light oil ≤ 20CST	Max. Fluids Temp.	Coil Type	Power consumption VA AC 110 V	Power consumption W DC 24 V	Coil Class	External Dimensions Length x Width x Height A x B x H	Model Code 110VAC NPT	Weight (KG)
3/8 "	13	4.5	7.5	230	230	190	80	D	20	17	H	66×48×107	USLP1DH01N1C13N	0.8
	13	4.5	7.5	230	230		130	D	20	17	H	66×48×107	USLP1DH01E1C13N	0.8
	13	4.5	7.5	230	230	190	120	D	20	17	H	66×48×107	USLP1DH01V1C13N	0.8
1/2 "	13	4.5	7.5	230	230	190	80	D	20	17	H	66×48×107	USLP1DH01N1D13N	0.7
	13	4.5	7.5	230	230		130	D	20	17	H	66×48×107	USLP1DH01E1D13N	0.7
	13	4.5	7.5	230	230	190	120	D	20	17	H	66×48×107	USLP1DH01V1D13N	0.7
3/4 "	20	7.6	7.5	230	230	190	80	D	20	17	H	75×58×112	USLP1DH01N1E20N	0.9
	20	7.6	7.5	230	230		130	D	20	17	H	75×58×112	USLP1DH01E1E20N	0.9
	20	7.6	7.5	230	230	190	120	D	20	17	H	75×58×112	USLP1DH01V1E20N	0.9
1 "	20	7.6	7.5	230	230	190	80	D	20	17	H	81×58×119	USLP1DH01N1G20N	1.1
	20	7.6	7.5	230	230		130	D	20	17	H	81×58×119	USLP1DH01E1G20N	1.1
	20	7.6	7.5	230	230	190	120	D	20	17	H	81×58×119	USLP1DH01V1G20N	1.1
	25	12	7.5	230	230	190	80	D	20	17	H	96×70×131	USLP1DH01N1G25N	1.4
	25	12	7.5	230	230		130	D	20	17	H	96×70×131	USLP1DH01E1G25N	1.4
	25	12	7.5	230	230	190	120	D	20	17	H	96×70×131	USLP1DH01V1G25N	1.4
1 1/4 "	35	22	7.5	230	230	190	80	D	20	17	H	131×96×146	USLP1DH01N1H35N	2.8
	35	22	7.5	230	230		130	D	20	17	H	131×96×146	USLP1DH01E1H35N	2.8
	35	22	7.5	230	230	190	120	D	20	17	H	131×96×146	USLP1DH01V1H35N	2.8
1 1/2 "	40	30	7.5	230	230	190	80	D	20	17	H	131×96×146	USLP1DH01N1J40N	2.7
	40	30	7.5	230	230		130	D	20	17	H	131×96×146	USLP1DH01E1J40N	2.7
	40	30	7.5	230	230	190	120	D	20	17	H	131×96×146	USLP1DH01V1J40N	2.7
2 "	40	30	7.5	230	230	190	80	D	20	17	H	136×96×152	USLP1DH01N1K40N	3.1
	40	30	7.5	230	230		130	D	20	17	H	136×96×152	USLP1DH01E1K40N	3.1
	40	30	7.5	230	230	190	120	D	20	17	H	136×96×152	USLP1DH01V1K40N	3.1
	50	48	7.5	230	230	190	80	D	20	17	H	165×120×167	USLP1DH01N1K50N	4
	50	48	7.5	230	230		130	D	20	17	H	165×120×167	USLP1DH01E1K50N	4
	50	48	7.5	230	230	190	120	D	20	17	H	165×120×167	USLP1DH01V1K50N	4

2-Way normally closed solenoid valve, Closed when de-energized, open when energized.

Serialized products, small in size, high flow rate, widely use

Body material: 316 stainless steel Max. Allowable pressure 290PSI

Ambient Temp:-10℃~65℃ Fluids Temp: 0℃~120℃

Voltage: AC110V/50Hz ; AC120/60Hz;
AC220V/50Hz; AC240V/60Hz,
AC230V 50/60Hz; AC36V 50/60Hz;
AC24V 50/60Hz;DC24V;DC12V ±10%

Flow as the arrow, mounts in any position;
best position is upright direction

It can add the signal feedback transmitter



Valve Selection List

Pipe Connection NPT	Orifice mm	CV Factor	Operating pressure differential (PSI) Min.	Max. Air	Max. Liquids	Max. Light oil ≤ 20CST	Max. Temp. ℃	Coil Type	consumption VA AC 110V	consumption W DC 24V	Coil Class	External Dimensions Length x Width x Height A x B x H	Model Code 110VAC NPT	Weight (KG)
3/8″	13	4.5	7.5	230	230	190	80	D	20	17	H	66×48×107	USLP1DH01N3C13N	0.75
	13	4.5	7.5	230	230		120	D	20	17	H	66×48×107	USLP1DH01E3C13N	0.75
	13	4.5	7.5	230	230	190	120	D	20	17	H	66×48×107	USLP1DH01V3C13N	0.75
1/2″	13	4.5	7.5	230	230	190	80	D	20	17	H	66×48×107	USLP1DH01N3D13N	0.7
	13	4.5	7.5	230	230		120	D	20	17	H	66×48×107	USLP1DH01E3D13N	0.7
	13	4.5	7.5	230	230	190	120	D	20	17	H	66×48×107	USLP1DH01V3D13N	0.7
3/4″	20	7.6	7.5	230	230	190	80	D	20	17	H	75×58×112	USLP1DH01N3E20N	0.9
	20	7.6	7.5	230	230		120	D	20	17	H	75×58×112	USLP1DH01E3E20N	0.9
	20	7.6	7.5	230	230	190	120	D	20	17	H	75×58×112	USLP1DH01V3E20N	0.9
1″	20	7.6	7.5	230	230	190	80	D	20	17	H	81×58×119	USLP1DH01N3G20N	1.1
	20	7.6	7.5	230	230		120	D	20	17	H	81×58×119	USLP1DH01E3G20N	1.1
	20	7.6	7.5	230	230	190	120	D	20	17	H	81×58×119	USLP1DH01V3G20N	1.1
	25	12	7.5	230	230	190	80	D	20	17	H	96×70×131	USLP1DH01N3G25N	1.3
	25	12	7.5	230	230		120	D	20	17	H	96×70×131	USLP1DH01E3G25N	1.3
	25	12	7.5	230	230	190	120	D	20	17	H	96×70×131	USLP1DH01V3G25N	1.3
1 1/4″	35	22	7.5	230	230	190	80	D	20	17	H	131×96×146	USLP1DH01N3H35N	2.6
	35	22	7.5	230	230		120	D	20	17	H	131×96×146	USLP1DH01E3H35N	2.6
	35	22	7.5	230	230	190	120	D	20	17	H	131×96×146	USLP1DH01V3H35N	2.6
1 1/2″	40	30	7.5	230	230	190	80	D	20	17	H	131×96×146	USLP1DH01N3J40N	2.5
	40	30	7.5	230	230		120	D	20	17	H	131×96×146	USLP1DH01E3J40N	2.5
	40	30	7.5	230	230	190	120	D	20	17	H	131×96×146	USLP1DH01V3J40N	2.5
2″	40	30	7.5	230	230	190	80	D	20	17	H	136×96×152	USLP1DH01N3K40N	3.1
	40	30	7.5	230	230		120	D	20	17	H	136×96×152	USLP1DH01E3K40N	3.1
	40	30	7.5	230	230	190	120	D	20	17	H	136×96×152	USLP1DH01V3K40N	3.1
	50	48	7.5	230	230	190	80	D	20	17	H	165×120×167	USLP1DH01N3K50N	4.4
	50	48	7.5	230	230		120	D	20	17	H	165×120×167	USLP1DH01E3K50N	4.4
	50	48	7.5	230	230	190	120	D	20	17	H	165×120×167	USLP1DH01V3K50N	4.4

USLP Series 2/2-Way Large Diameter Pilot Operated Solenoid Valve <Normally Closed>

Valve Selection List (Flange Connection)

Orifice mm	CV Factor	Operating pressure differential (PSI) Min.	Max. Air AC	Max. Air DC	Max. Liquids AC	Max. Liquids DC	Max. Light oil≤20CST AC	Max. Light oil≤20CST DC	Max. Fluids Temp.	Coil Type	Power consumption VA AC 110V	Power consumption W DC 24V	Coil Class	Model Code 110VAC	Weight (KG)
25	12	5	230	230	230	230	190	190	80	D	20	17	H	USLP1DH01N3F25	2. 7
25	12	5	230	230	230	230	190	190	120	D	20	17	H	USLP1DH01E3F25	2. 7
25	12	5	230	230	230	230	190	190	120	D	20	17	H	USLP1DH01V3F25	2. 7
35	22	5	230	230	230	230	190	190	80	D	20	17	H	USLP1DH01N3F35	5. 0
35	22	5	230	230	230	230			120	D	20	17	H	USLP1DH01E3F35	5. 0
35	22	5	230	230	230	230	190	190	120	D	20	17	H	USLP1DH01V3F35	5. 0
40	30	5	230	230	230	230	190	190	80	D	20	17	H	USLP1DH01N3F40	5. 3
40	30	5	230	230	230	230			120	D	20	17	H	USLP1DH01E3F40	5. 3
40	30	5	230	230	230	230	190	190	120	D	20	17	H	USLP1DH01V3F40	5. 3
50	48	5	230	230	230	230	190	190	80	D	20	17	H	USLP1DH01N3F50	7. 9
50	48	5	230	230	230	230			120	D	20	17	H	USLP1DH01E3F50	7. 9
50	48	5	230	230	230	230	190	190	120	D	20	17	H	USLP1DH01V3F50	7. 9
65	52	15	90	90	90	90	75	75	80	D	20	17	H	USLP1DH01N4F65	13. 4
65	52	15	90	90	90	90			120	D	20	17	H	USLP1DH01E4F65	13. 4
65	52	15	90	90	90	90	75	75	120	D	20	17	H	USLP1DH01V4F65	13. 4
80	80	15	90	90	90	90	75	75	80	D	20	17	H	USLP1DH01N4F80	15. 5
80	80	15	90	90	90	90			120	D	20	17	H	USLP1DH01E4F80	15. 5
80	80	15	90	90	90	90	75	75	120	D	20	17	H	USLP1DH01V4F80	15. 5
100	128	15	90	90	90	90	75	75	80	D	20	17	H	USLP1DH01N4F100	22
100	128	15	90	90	90	90			120	D	20	17	H	USLP1DH01E4F100	22
100	128	15	90	90	90	90	75	75	120	D	20	17	H	USLP1DH01V4F100	22

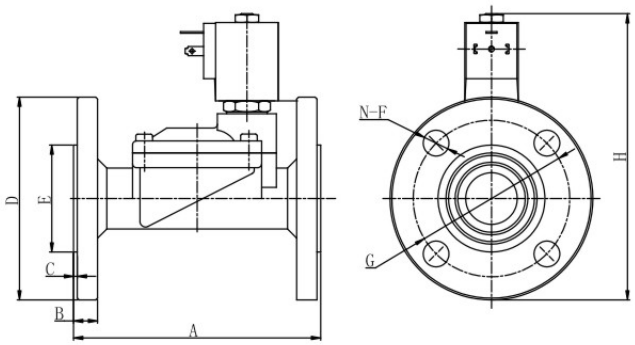



	A	B	C	ΦD	ΦE	N-ΦF	ΦG	H
USLP-25BF	134	13	2	110	58	4-14	85	156
USLP-32BF	160	15	2	135	74	4-18	100	182
USLP-40BF	160	15	2	145	84	4-18	110	184
USLP-50BF	200	16	2	160	88	4-18	125	202
USLP-65BF	250	19	3	185	118	4-18	145	245
USLP-80BF	270	19	3	202	134	4-18	160	257
USLP-100BF	340	21	3	220	162	8-18	180	282

USLP Plastic Series 2/2-Way Pilot Operated Solenoid Valve

2-Way normally closed solenoid valve, Closed when de-energized, open when energized.

Serialized products, small in size, high flow rate, wide usage

Body material: Nylon (PA6) Max. Allowable pressure 190 PSI

Ambient Temp:-10℃~65℃ Fluids Temp: 0℃~80℃

Voltage: AC110V/50Hz ; AC120/60Hz;
AC220V/50Hz; AC240V/60Hz,
AC230V 50/60Hz; AC36V 50/60Hz;
AC24V 50/60Hz;DC24V;DC12V ±10%

Flow as the arrow, mounts in any position;
best position is upright direction



Valve Selection List

Pipe Conn -ection NPT	Orifice mm	CV Factor	Operating pressure differential (PSI) Min.	Max. Air Gas	Max. Water Hot water Liquids	Max. Light oil ≤ 20CST	Max. Fluids Temp.	Coil Type	Power consumption VA AC 110V	Power consumption W DC 24V	Coil Class	External Dimensions Length x Width x Height A x B x H	Model Code 110VAC NPT	Weight (KG)
3/8″	13	4.5	5	145	145	90	80	D	20	17	H	76×52×112	USLP1DH01N7C13N	0.38
	13	4.5	5	145	145		80	D	20	17	H	76×52×112	USLP1DH01E7C13N	0.38
	13	4.5	5	145	145	90	80	D	20	17	H	76×52×112	USLP1DH01V7C13N	0.38
1/2″	13	4.5	5	145	145	90	80	D	20	17	H	76×52×112	USLP1DH01N7D13N	0.37
	13	4.5	5	145	145		80	D	20	17	H	76×52×112	USLP1DH01E7D13N	0.37
	13	4.5	5	145	145	90	80	D	20	17	H	76×52×112	USLP1DH01V7D13N	0.37
3/4″	20	7.6	5	145	145	90	80	D	20	17	H	90×71×116	USLP1DH01N7E20N	0.43
	20	7.6	5	145	145		80	D	20	17	H	90×71×116	USLP1DH01E7E20N	0.43
	20	7.6	5	145	145	90	80	D	20	17	H	90×71×116	USLP1DH01V7E20N	0.43
1″	25	12	5	145	145	90	80	D	20	17	H	111×91×123	USLP1DH01N7G25N	0.49
	25	12	5	145	145		80	D	20	17	H	111×91×123	USLP1DH01E7G25N	0.49
	25	12	5	145	145	90	80	D	20	17	H	111×91×123	USLP1DH01V7G25N	0.49
11/4″	35	22	5	145	145	90	80	D	20	17	H	158×115×141	USLP1DH01N7H35N	0.85
	35	22	5	145	145		80	D	20	17	H	158×115×141	USLP1DH01E7H35N	0.85
	35	22	5	145	145	90	80	D	20	17	H	158×115×141	USLP1DH01V7H35N	0.85
11/2″	40	30	5	145	145	90	80	D	20	17	H	158×115×141	USLP1DH01N7J40N	0.78
	40	30	5	145	145		80	D	20	17	H	158×115×141	USLP1DH01E7J40N	0.78
	40	30	5	145	145	90	80	D	20	17	H	158×115×141	USLP1DH01V7J40N	0.78

USLP Series 2/2-Way Large Diameter Pilot Operated Solenoid Valve <*Normally Open*>

2-Way normally open solenoid valve, open when de-energized, Closed when energized.

Serialized products, small in size, high flow rate, widely use

Body material: forged brass. Max. Allowable pressure 230PSI

Ambient Temp:-10℃~65℃ Fluids Temp: 0℃~120℃

Voltage: AC110V/50Hz ; AC120/60Hz;
AC220V/50Hz; AC240V/60Hz,
AC230V 50/60Hz; AC36V 50/60Hz;
AC24V 50/60Hz;DC24V;DC12V ±10%

Flow as the arrow, mounts in any position;
best position is upright direction

It can add the signal feedback transmitter



Normally open

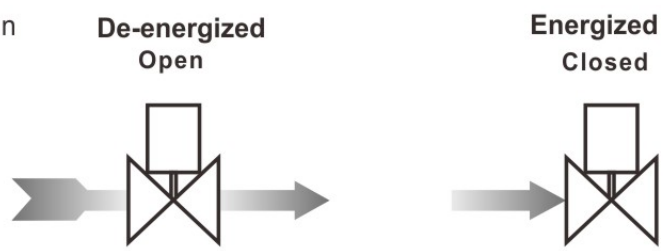

Construction, External Dimensions Chart

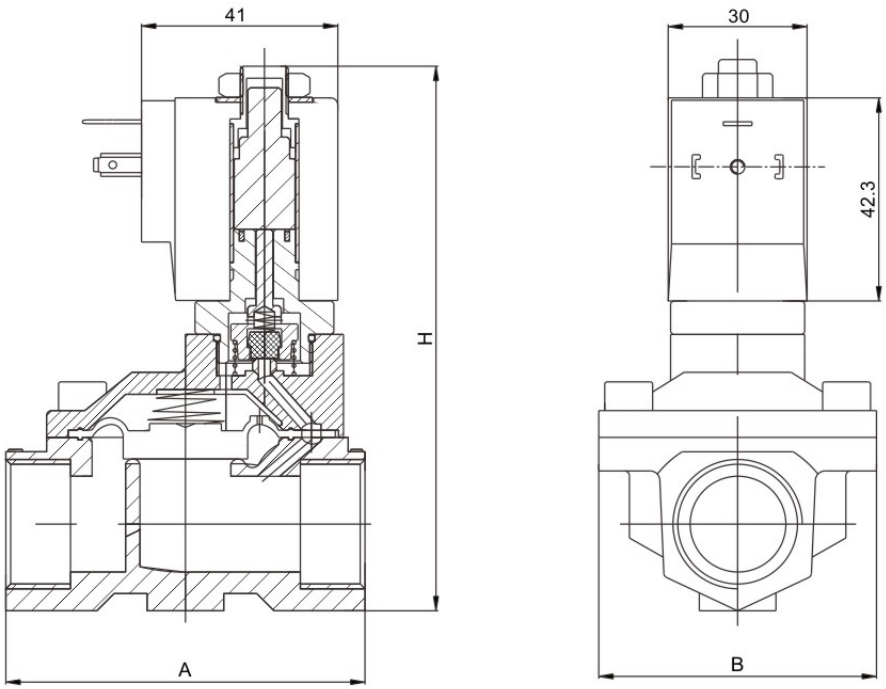

Valve Selection List

Pipe Connection NPT	Orifice mm	CV Factor	Operating pressure differential (PSI) Min.	Max. Air	Max. Liquids	Max. Light oil ≤20CST	Max. Fluids Temp.	Coil Type	Power consumption VA AC 110 V	Power consumption W DC 24 V	Coil Class	External Dimensions Length x Width x Height A x B x H	Model Code 110VAC NPT	Weight (KG)
3/8″	13	4.5	7.5	145	145	90	80	D	20	17	H	66×48×107	USLP2DH01N1C13N	0.8
	13	4.5	7.5	145	145		120	D	20	17	H	66×48×107	USLP2DH01E1C13N	0.8
	13	4.5	7.5	145	145	90	120	D	20	17	H	66×48×107	USLP2DH01V1C13N	0.8
1/2″	13	4.5	7.5	145	145	90	80	D	20	17	H	66×48×107	USLP2DH01N1D13N	0.7
	13	4.5	7.5	145	145		120	D	20	17	H	66×48×107	USLP2DH01E1D13N	0.7
	13	4.5	7.5	145	145	90	120	D	20	17	H	66×48×107	USLP2DH01V1D13N	0.7
3/4″	20	7.6	7.5	145	145	90	80	D	20	17	H	75×58×112	USLP2DH01N1E20N	0.9
	20	7.6	7.5	145	145		120	D	20	17	H	75×58×112	USLP2DH01E1E20N	0.9
	20	7.6	7.5	145	145	90	120	D	20	17	H	75×58×112	USLP2DH01V1E20N	0.9
1″	20	7.6	7.5	145	145	90	80	D	20	17	H	81×58×119	USLP2DH01N1G20N	1.1
	20	7.6	7.5	145	145		120	D	20	17	H	81×58×119	USLP2DH01E1G20N	1.1
	20	7.6	7.5	145	145	90	120	D	20	17	H	81×58×119	USLP2DH01V1G20N	1.1
	25	12	7.5	145	145	90	80	D	20	17	H	96×70×131	USLP2DH01N1G25N	1.3
	25	12	7.5	145	145		120	D	20	17	H	96×70×131	USLP2DH01E1G25N	1.3
	25	12	7.5	145	145	190	120	D	20	17	H	96×70×131	USLP2DH01V1G25N	1.3
1 1/4″	35	22	7.5	115	115	90	80	D	20	17	H	131×96×146	USLP2DH01N1H35N	2.6
	35	22	7.5	115	115		120	D	20	17	H	131×96×146	USLP2DH01E1H35N	2.6
	35	22	7.5	115	115	90	120	D	20	17	H	131×96×146	USLP2DH01V1H35N	2.6
1 1/2″	40	30	7.5	115	115	90	80	D	20	17	H	131×96×146	USLP2DH01N1J40N	2.5
	40	30	7.5	115	115		120	D	20	17	H	131×96×146	USLP2DH01E1J40N	2.5
	40	30	7.5	115	115	90	120	D	20	17	H	131×96×146	USLP2DH01V1J40N	2.5
2″	40	30	7.5	115	115	90	80	D	20	17	H	136×96×152	USLP2DH01N1K40N	3.1
	40	30	7.5	115	115		120	D	20	17	H	136×96×152	USLP2DH01E1K40N	3.1
	40	30	7.5	115	115	90	120	D	20	17	H	136×96×152	USLP2DH01V1K40N	3.1
	50	48	7.5	115	115	90	80	D	20	17	H	165×120×167	USLP2DH01N1K50N	4.4
	50	48	7.5	115	115		120	D	20	17	H	165×120×167	USLP2DH01E1K50N	4.4
	50	48	7.5	115	115	90	120	D	20	17	H	165×120×167	USLP2DH01V1K50N	4.4

USLP Series 2/2-Way Large Diameter Pilot Operated Solenoid Valve <Normally Open>

2-Way normally open solenoid valve, open when de-energized, Closed when energized.

Serialized products, small in size, high flow rate, widely use

Body material: 316 stainless steel Max. Allowable pressure:230PSI

Ambient Temp:-10℃~65℃ Fluids Temp: 0℃~120℃

Voltage: AC110V/50Hz ; AC120/60Hz;
AC220V/50Hz; AC240V/60Hz,
AC230V 50/60Hz; AC36V 50/60Hz;
AC24V 50/60Hz;DC24V;DC12V ±10%

Flow as the arrow, mounts in any position;
best position is upright direction

It can add the signal feedback transmitter



Valve Selection List

Pipe Conn -ection NPT	Orifice mm	CV Factor	Operating pressure differential (PSI) Min.	Max. Air	Max. Liquids	Max. Light oil ≤20CST	Max. Temp. ℃	Coil Type	consumption VA AC 110 V	consumption W DC 24 V	Coil Class	External Dimensions Length x Width x Height A x B x H	Model Code 110VAC NPT	Weight (KG)
3/8″	13	4.5	7.5	145	145	90	80	D	20	17	H	66×48×107	USLP2DH01N3C13N	0.8
	13	4.5	7.5	145	145		120	D	20	17	H	66×48×107	USLP2DH01E3C13N	0.8
	13	4.5	7.5	145	145	90	120	D	20	17	H	66×48×107	USLP2DH01V3C13N	0.8
1/2″	13	4.5	7.5	145	145	90	80	D	20	17	H	66×48×107	USLP2DH01N3D13N	0.7
	13	4.5	7.5	145	145		120	D	20	17	H	66×48×107	USLP2DH01E3D13N	0.7
	13	4.5	7.5	145	145	90	120	D	20	17	H	66×48×107	USLP2DH01V3D13N	0.7
3/4″	20	7.6	7.5	145	145	90	80	D	20	17	H	75×58×112	USLP2DH01N3E20N	0.9
	20	7.6	7.5	145	145		120	D	20	17	H	75×58×112	USLP2DH01E3E20N	0.9
	20	7.6	7.5	145	145	90	120	D	20	17	H	75×58×112	USLP2DH01V3E20N	0.9
1″	20	7.6	7.5	145	145	90	80	D	20	17	H	81×58×119	USLP2DH01N3G20N	1.1
	20	7.6	7.5	145	145		120	D	20	17	H	81×58×119	USLP2DH01E3G20N	1.1
	20	7.6	7.5	145	145	90	120	D	20	17	H	81×58×119	USLP2DH01V3G20N	1.1
	25	12	7.5	145	145	90	80	D	20	17	H	96×70×131	USLP2DH01N3G25N	1.3
	25	12	7.5	145	145		120	D	20	17	H	96×70×131	USLP2DH01E3G25N	1.3
	25	12	7.5	145	145	190	120	D	20	17	H	96×70×131	USLP2DH01V3G25N	1.3
1 1/4″	35	22	7.5	115	115	90	80	D	20	17	H	131×96×146	USLP2DH01N3H35N	2.6
	35	22	7.5	115	115		120	D	20	17	H	131×96×146	USLP2DH01E3H35N	2.6
	35	22	7.5	115	115	90	120	D	20	17	H	131×96×146	USLP2DH01V3H35N	2.6
1 1/2″	40	30	7.5	115	115	90	80	D	20	17	H	131×96×146	USLP2DH01N3J40N	2.5
	40	30	7.5	115	115		120	D	20	17	H	131×96×146	USLP2DH01E3J40N	2.5
	40	30	7.5	115	115	90	120	D	20	17	H	131×96×146	USLP2DH01V3J40N	2.5
2″	40	30	7.5	115	115	90	80	D	20	17	H	136×96×152	USLP2DH01N3K40N	3.1
	40	30	7.5	115	115		120	D	20	17	H	136×96×152	USLP2DH01E3K40N	3.1
	40	30	7.5	115	115	90	120	D	20	17	H	136×96×152	USLP2DH01V3K40N	3.1
	50	48	7.5	115	115	90	80	D	20	17	H	165×120×167	USLP2DH01N3K50N	4.4
	50	48	7.5	115	115		120	D	20	17	H	165×120×167	USLP2DH01E3K50N	4.4
	50	48	7.5	115	115	90	120	D	20	17	H	165×120×167	USLP2DH01V3K50N	4.4

Valve Selection List (Flange Connection)

Orifice mm	CV Factor	Operating pressure differential (PSI) Min.	Max. Air AC	Max. Air DC	Max. Liquids AC	Max. Liquids DC	Max. Light oil≤20CST AC	Max. Light oil≤20CST DC	Max. Fluids Temp.	Coil Type	Power consumption VA AC 110V	Power consumption W DC 24V	Coil Class	Model Code 110VAC	Weight (KG)
25	12	5	145	115	145	115	115	90	80	D	20	17	H	USLP2DH01N3F25	2.7
25	12	5	145	115	145	115			120	D	20	17	H	USLP2DH01E3F25	2.7
25	12	5	145	115	145	115	115	90	120	D	20	17	H	USLP2DH01V3F25	2.7
35	22	5	115	90	115	90	90	75	80	D	20	17	H	USLP2DH01N3F35	5.0
35	22	5	115	90	115	90			120	D	20	17	H	USLP2DH01E3F35	5.0
35	22	5	115	90	115	90	90	75	120	D	20	17	H	USLP2DH01V3F35	5.0
40	30	5	115	90	115	90	90	75	80	D	20	17	H	USLP2DH01N3F40	5.3
40	30	5	115	90	115	90			120	D	20	17	H	USLP2DH01E3F40	5.3
40	30	5	115	90	115	90	90	75	120	D	20	17	H	USLP2DH01V3F40	5.3
50	48	5	115	90	115	90	90	75	80	D	20	17	H	USLP2DH01N3F50	7.9
50	48	5	115	90	115	90			120	D	20	17	H	USLP2DH01E3F50	7.9
50	48	5	115	90	115	90	90	75	120	D	20	17	H	USLP2DH01V3F50	7.9

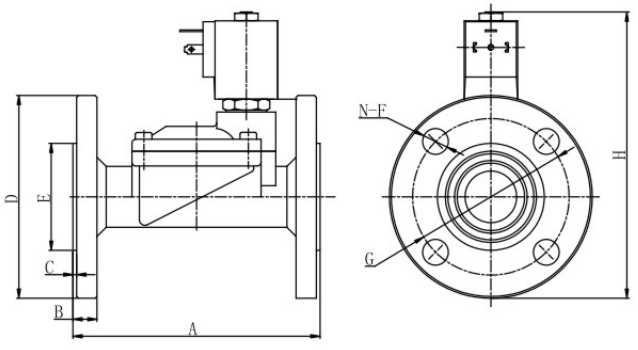



Model	A	B	C	ΦD	ΦE	N-ΦH	ΦG	H
USLP2-25BF	134	13	2	110	58	4-14	85	156
USLP2-32BF	160	15	2	135	74	4-18	100	182
USLP2-40BF	160	15	2	145	84	4-18	110	184
USLP2-50BF	200	16	2	160	88	4-18	125	202

USLP Plastic Series 2/2-way Pilot Operated Solenoid Valve <Normally Open>

2-Way normally open solenoid valve, open when de-energized, Closed when energized.

Serialized products, small in size, high flow rate, widely use

Body material: Nylon(PA6) Max. Allowable pressure 175PSI

Ambient Temp:-10℃~65℃ Fluids Temp: 0℃~80℃

Voltage: AC110V/50Hz ; AC120/60Hz;
AC220V/50Hz; AC240V/60Hz,
AC230V 50/60Hz; AC36V 50/60Hz;
AC24V 50/60Hz;DC24V;DC12V ±10%

Flow as the arrow, mounts in any position;
best position is upright direction



Valve Selection List

Pipe Conn -ection NPT	Orifice mm	CV Factor	Operating pressure differential (PSI) Min.	Max. Air、Liquids AC	Max. Air、Liquids DC	Max. Light oil≤20CST AC	Max. Light oil≤20CST DC	Max. Fluids Temp.	Coil Type	Power consumption VA AC 110V	Power consumption W DC 24V	Coil Class	External Dimensions Length x Width x Height A x B x H	Model Code 110VAC NPT	Weight (KG)
	13	4.5	5	115	115	115	90	80	D	20	17	H	76×52×112	USLP2DH01N7C13N	0.38
3/8″	13	4.5	5	115	115			80	D	20	17	H	76×52×112	USLP2DH01E7C13N	0.38
	13	4.5	5	115	115	115	90	80	D	20	17	H	76×52×112	USLP2DH01V7C13N	0.38
	13	4.5	5	115	115	115	90	80	D	20	17	H	76×52×112	USLP2DH01N7D13N	0.37
1/2″	13	4.5	5	115	115			80	D	20	17	H	76×52×112	USLP2DH01E7D13N	0.37
	13	4.5	5	115	115	115	90	80	D	20	17	H	76×52×112	USLP2DH01V7D13N	0.37
	20	7.6	5	115	115	115	90	80	D	20	17	H	90×71×116	USLP2DH01N7E20N	0.43
3/4″	20	7.6	5	115	115			80	D	20	17	H	90×71×116	USLP2DH01E7E20N	0.43
	20	7.6	5	115	115	115	90	80	D	20	17	H	90×71×116	USLP2DH01V7E20N	0.43
	25	12	5	115	115	115	90	80	D	20	17	H	111×91×123	USLP2DH01N7G25N	0.49
1″	25	12	5	115	115			80	D	20	17	H	111×91×123	USLP2DH01E7G25N	0.49
	25	12	5	115	115	115	90	80	D	20	17	H	111×91×123	USLP2DH01V7G25N	0.49
	35	22	5	115	90	90	75	80	D	20	17	H	158×115×141	USLP2DH01N7H35N	0.85
11/4″	35	22	5	115	90			80	D	20	17	H	158×115×141	USLP2DH01E7H35N	0.85
	35	22	5	115	90	90	75	80	D	20	17	H	158×115×141	USLP2DH01V7H35N	0.85
	40	30	5	115	90	90	75	80	D	20	17	H	158×115×141	USLP2DH01N7J40N	0.78
11/2″	40	30	5	115	90			80	D	20	17	H	158×115×141	USLP2DH01E7J40N	0.78
	40	30	5	115	90	90	75	80	D	20	17	H	158×115×141	USLP2DH01V7J40N	0.78

Solenoid Valves Numbering System for Order

1	2	3	4	5	6	7	8	9	10
Valve Series	Mode of Operation	Coil Type	Coil Class	Voltage	Seal Material	Body Material	Pipe Size	Orifice (Φ mm)	Options
USLA	1	D	H	01	T	1	E	20	N
	1= Normally Closed	D=DIN Standard Connections, Fully Encapsulated	H=H Class (UL)	01= AC110V 50Hz/ AC120V 60Hz 02= AC220V 50Hz/ AC240V 60Hz 03=AC36V 05=AC24V 20=AC230V 50/60Hz 12=DC12V 13=DC24V	T= Teflon +Fiberglass	1= Forged Brass 3= SS316 4= SS304 (Normal) 4= SS304	A= 1/8" B= 1/4" C= 3/8" D= 1/2" E= 3/4" G= 1" F=Flange Connection	C3=2.5 C6=4.5 15=15.0 20=20.0 25=25.0 25=25.0	L=Neon Lamp N=NPT Connection Blank is G thread

USLA Series 2/2-Way Pilot Operated Piston Solenoid Valve <Normally Closed>

2-Way normally closed solenoid valve; Closed when de-energized, open when energized.

Body material: brass

Max. Allowable pressure 435PSI

Ambient Temp :-10℃~65℃ Fluids Temp: 0℃~170℃

Voltage: AC110V/50Hz ; AC120/60Hz;
AC220V/50Hz; AC240V/60Hz,
AC230V 50/60Hz; AC36V 50/60Hz;
AC24V 50/60Hz;DC24V;DC12V ±10%

Flow as the arrow, mounts in any position; Best position is Solenoid vertical and upright direction.



Valve Selection List

Pipe Conn -ection NPT	Orifice mm	CV Factor	Operating pressure differential (PSI) Min.	Max. Air、Liquids AC	Max. Air、Liquids DC	Max. steam AC	Max. steam DC	Max. Fluids Temp.	Coil Type	Power consumption VA AC 110V	Power consumption W DC 24V	Coil Class	External Dimensions Length x Width x Height A x B x H	Model Code 110VAC NPT	Weight (KG)
1/8″	2.5	0.23	0	190	190	90	90	160	D	20	17	H	48×25×81	USLA1DH01T1AC3N	0.4
	4.5	0.6	0	100	100	60	60	160	D	20	17	H	58×25×81	USLA1DH01T1AC6N	0.5
1/4″	2.5	0.23	0	190	190	90	90	160	D	20	17	H	48×25×81	USLA1DH01T1BC3N	0.35
	4.5	0.6	0	100	100	60	60	160	D	20	17	H	58×25×81	USLA1DH01T1BC6N	0.45
3/8″	15	4.5	5	290	190	115	115	170	D	20	17	H	75×52×133	USLA1DH01T1C15N	1.4
1/2″	15	4.5	5	290	190	115	115	170	D	20	17	H	75×52×133	USLA1DH01T1D15N	1.35
3/4″	20	9.0	5	290	190	115	115	170	D	20	17	H	85×60×141	USLA1DH01T1E20N	1.6
1″	25	13	5	290	190	115	115	170	D	20	17	H	100×70×148	USLA1DH01T1G25N	20

Construction, External Dimensions Chart

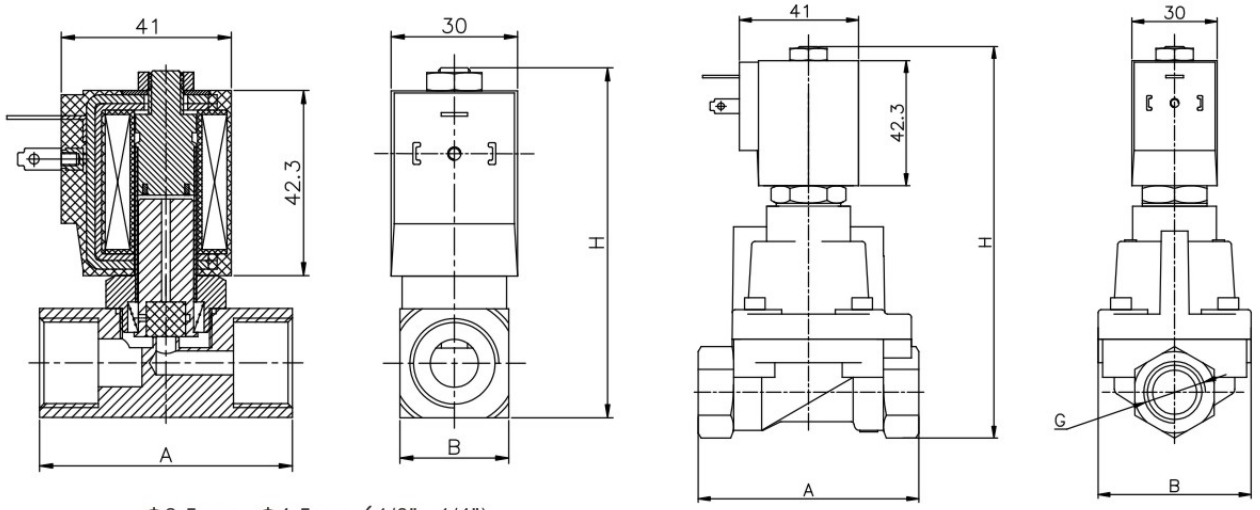

Φ2.5mm、Φ4.5mm（1/8"、1/4"）

USLA Series 2/2-Way Pilot Operated Piston Solenoid Valve

2-Way normally closed solenoid valve Closed when de-energized, open when energized.

Body material:304 stainless steel（standard）

Max. Allowable pressure 435PSI

Ambient Temp:-10℃~65℃ Fluids Temp: 0℃~170℃

Voltage: AC110V/50Hz ; AC120/60Hz;
AC220V/50Hz; AC240V/60Hz,
AC230V 50/60Hz; AC36V 50/60Hz;
AC24V 50/60Hz;DC24V;DC12V ±10%

Flow as the arrow, mounts in any position; Best position is Solenoid vertical and upright direction.



Valve Selection List

Pipe Connection NPT	Orifice mm	CV Factor	Operating pressure differential (PSI) Min.	Max. Air、Liquids AC	Max. Air、Liquids DC	Max. steam AC	Max. steam DC	Max. Fluids Temp.	Coil Type	Power consumption VA AC 110V	Power consumption W DC 24V	Coil Class	External Dimensions Length x Width x Height A x B x H	Model Code 110VAC NPT	Weight (KG)
3/8″	15	4.5	5	290	190	115	115	170	D	20	17	H	75×52×133	USLA1DH01T4C15N	1.4
1/2″	15	4.5	5	290	190	115	115	170	D	20	17	H	75×52×133	USLA1DH01T4D15N	1.35
3/4″	20	9.0	5	290	190	115	115	170	D	20	17	H	85×60×141	USLA1DH01T4E20N	1.6
1″	25	13	5	290	190	115	115	170	D	20	17	H	100×70×148	USLA1DH01T4G25N	2.0

External Dimensions

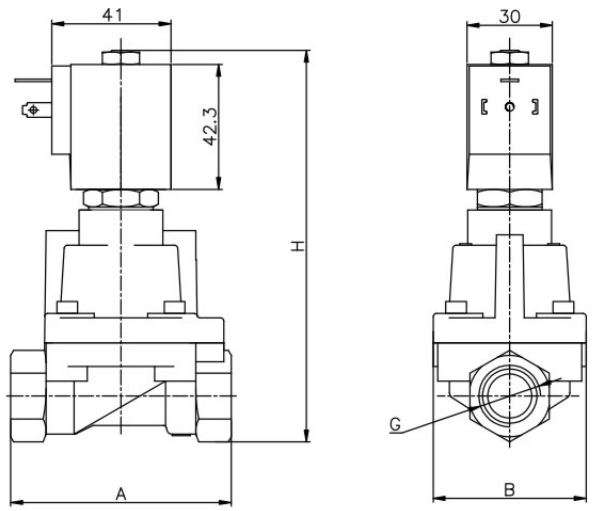

USLA Series 2/2-Way Pilot Operated Piston Solenoid Valve <Normally Closed>

Valve Selection List

Orifice mm	CV Factor	Operating pressure differential (PSI)					Max. Fluids Temp.	Coil Type	Power consumption		Coil Class	Model Code 110VAC	Weight (KG)
		Min.	Max.						VA	W			
			Air、Liquids		steam				AC 110V	DC 24V			
			AC	DC	AC	DC							
25	13	5	290	190	115	115	170	D	20	17	H	USLA1DH01T4F25	3.5

External Dimensions

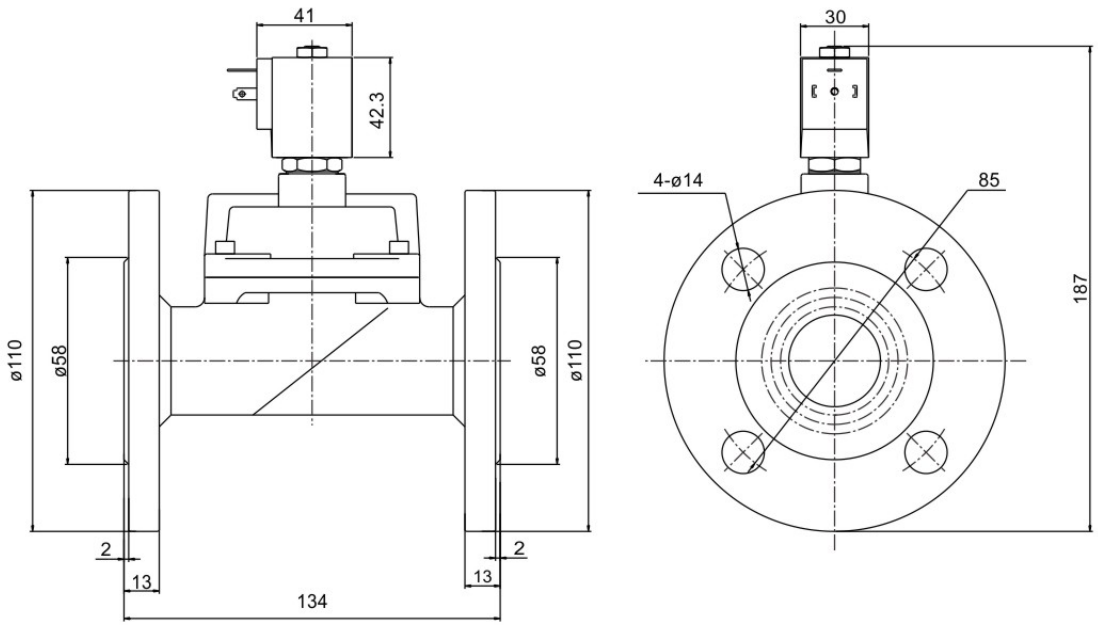

USLG Series 2/2-Way High Pressure Solenoid Valve

2-Way normally closed solenoid valve Closed when de-energized, open when energized.

Serialized products, small in size, high flow rate, wide usage

Body material: forged brass.304 stainless steel.

Ambient Temp:-10℃~65℃； Fluids Temp：0℃~110℃.

Voltage： AC110V/50Hz ; AC120/60Hz;
AC220V/50Hz； AC240V/60Hz,
AC230V 50/60Hz; AC36V 50/60Hz;
AC24V 50/60Hz;DC24V;DC12V ±10%

Flow as the arrow .mounts in any position ;Best position is Solenoid vertical and upright diriction.



Solenoid Valves Numbering System for Order

1	2	3	4	5	6	7	8	9	10
Valve Series	Mode of Operation	Coil Type	Coil Class	Voltage	Seal Material	Body Material	Pipe Size	Orifice (mm)	Options
USLG	1	D	H	01	N	1	A	01	N
	1= Normally Closed	D=DIN Standard Connections, Fully Encapsulated	H=H Class (UL)	01= AC110V50Hz/ AC120V 60Hz 02= AC220V 50Hz AC240V 60Hz 03=AC36V 05=AC24V 20=AC230V 50/60Hz 12=DC12V 13=DC24V	N=NRB E=EPDM T=PTFE	1=Forged Brass 3=SS316 4=SS304	A=1/8" B=1/4"	01=1.0 C1=1.2 C2=1.5 C3=2.5	L=Neon lamp N=NPT Connection Blank is G thread
							C=3/8" D=1/2"	15=15.0	
							E=3/4"	20=20.0	
							G=1"	25=25.0	

External Dimensions

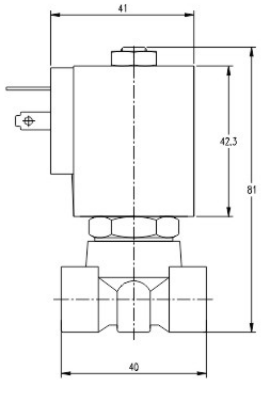

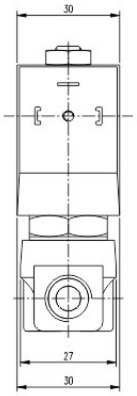

Φ1~2.5mm（1/8"、1/4"）

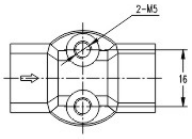

USLG Series 2/2-Way High Pressure Solenoid Valve <Normally Closed>

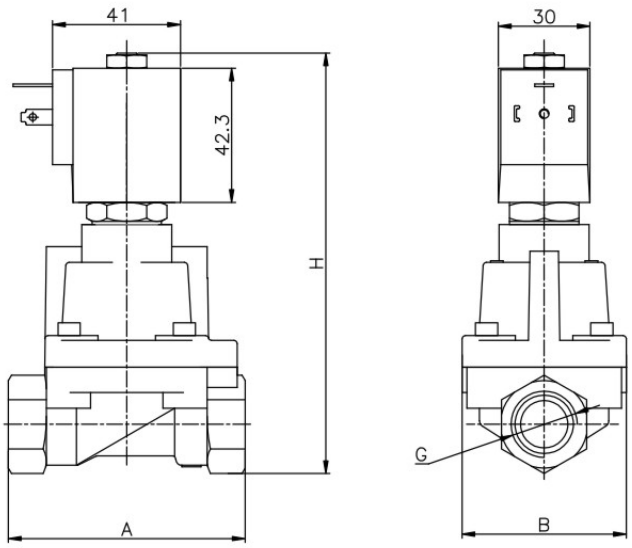

Model	Pipe size G	A	B	H
USLG-15	3/8"	75	52	133
USLG-15	1/2"	75	52	133
USLG-20	3/4"	85	60	141
USLG-25	1"	100	70	148

Valve Selection List

Pipe Conn -ection NPT	Orifice mm	CV Factor	Operating pressure differential (PSI)							Power consumption		Model Code 110VAC NPT Seal Material:VITON		Weight (KG)
			Min.	Max.						VA	W			
				Air		Liquids		Light oil ≤20CST		AC 110V	DC 24V	Body material:		
				AC	DC	AC	DC	AC	DC			Forged brass	Stainless Steel	
1/8"	1.0	0.04	0	2300	1450	2300	1450	1885	1305	20	17	USLG1DH01V1A01N	USLG1DH01V3A01N	0.4
	1.2	0.05	0	1740	1305	1740	1305	1595	1160	20	17	USLG1DH01V1AC1N	USLG1DH01V3AC1N	0.4
	1.5	0.08	0	1160	725	1160	725	1015	580	20	17	USLG1DH01V1AC2N	USLG1DH01V3AC2N	0.4
	2.0	0.14	0	580	290	580	290	435	220	20	17	USLG1DH01V1A02N	USLG1DH01V3A02N	0.4
	2.5	0.23	0	290	220	290	220	220	145	20	17	USLG1DH01V1AC3N	USLG1DH01V3AC3N	0.4
1/4"	1.0	0.04	0	2300	1450	2300	1450	1885	1305	20	17	USLG1DH01V1B01N	USLG1DH01V3B01N	0.4
	1.2	0.05	0	1740	1305	1740	1305	1595	1160	20	17	USLG1DH01V1BC1N	USLG1DH01V3BC1N	0.4
	1.5	0.08	0	1160	725	1160	725	1015	580	20	17	USLG1DH01V1BC2N	USLG1DH01V3BC2N	0.4
	2.0	0.14	0	580	290	580	290	435	220	20	17	USLG1DH01V1B02N	USLG1DH01V3B02N	0.4
	2.5	0.23	0	290	220	290	220	220	145	20	17	USLG1DH01V1BC3N	USLG1DH01V3BC3N	0.4
3/8"	15	4.2	15	655	580	655	580	510	435	20	17	USLG1DH01V1C15N	USLG1DH01N4V15N	1.4
1/2"	15	4.2	15	655	580	655	580	510	435	20	17	USLG1DH01V1D15N	USLG1DH01N4V15N	1.35
3/4"	20	7	15	655	580	655	580	510	435	20	17	USLG1DH01V1E20N	USLG1DH01N4V20N	1.6
1"	25	11	15	655	580	655	580	510	435	20	17	USLG1DH01V1G25N	USLG1DH01N4V25N	2.0

USLV Series 3/2-Way Direct Acting Solenoid Valve

USLV Series 3/2-way direct acting solenoid valve

USLV1 · Normally Colsed;

USLV2 · Normally Open

USLV3 · Diverting;

USLV4 · Universal

USLV5 · Free Exhaust



Solenoid ValvesNumbering System for Order

1	2	3	4	5	6	7	8	9	10
Valve Series	Mode of Operation	Coil Type	Coil Class	Voltage	Seal Material	Body Material	Pipe Size	Orifice (ϕ mm)	Options
USLV	**1**	**D**	**H**	**01**	**N**	**1**	**A**	**V1**	**N**
	1=Normally Closed 2= Normally Open 3= Diverting 4= Universal 5= Normally Closed (Free exhaust)	D= DIN Standard Connections, Fully Encapsulated	H=H Class (UL)	01= AC110V50Hz/ AC120V60HZ 02= AC220V50Hz/ AC240V60Hz 03= AC36V 05= AC24V 20= AC230V 50/60Hz 12= DC12V 13= DC24V	N= NBR E= EPDM V= VITON	1=Brass 3=SS316	A=1/8" B=1/4"	V1=1.5×1.2 V2=2.0×1.2 V3=2.5×1.2 V4=3.0×1.2	L=Neon lamp N=NPT Connection Blank is G thread

USLV1 Normally closed type (Brass)

Pipe Conn -ection NPT	Orifice mm		CV Factor		Operating pressure differential (PSI)					Max. Fluids Temp.	Power consumption		Model Code 110VAC NPT Seal Material:NBR
					Min.	Max.					VA	W	
	Body	Top	Body	Top		Air Liquids		Light oil ≤20CST			AC 110V	DC 24V	Body material
						AC	DC	AC	DC				Brass
1/8"	1.5	1.2	0.07	0.05	0	145	145	145	145	80	20	17	USLV1DH01N1AV1N
	2.0	1.2	0.14	0.05	0	115	115	115	115	80	20	17	USLV1DH01N1AV2N
	2.5	1.2	0.21	0.02	0	90	90	90	90	80	20	17	USLV1DH01N1AV3N
	3.0	1.2	0.23	0.05	0	60	60	60	60	80	20	17	USLV1DH01N1AV4N
1/4"	1.5	1.2	0.07	0.05	0	145	145	145	145	80	20	17	USLV1DH01N1BV1N
	2.0	1.2	0.14	0.05	0	115	115	115	115	80	20	17	USLV1DH01N1BV2N
	2.5	1.2	0.21	0.02	0	90	90	90	90	80	20	17	USLV1DH01N1BV3N
	3.0	1.2	0.23	0.05	0	60	60	60	60	80	20	17	USLV1DH01N1BV4N

Normally closed

De-energized

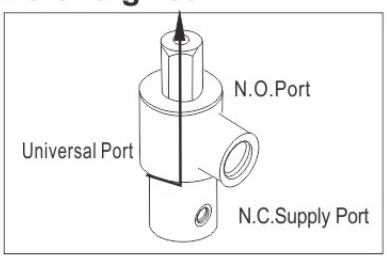

Energized

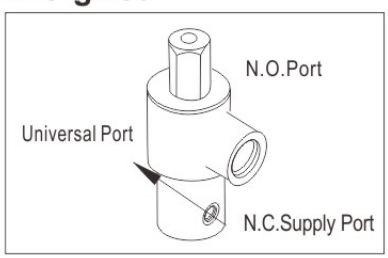

Construction, External Dimensions Chart

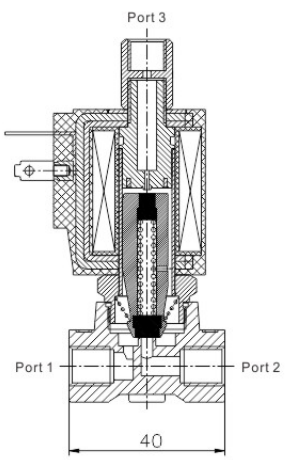

1 & 3 Body Type

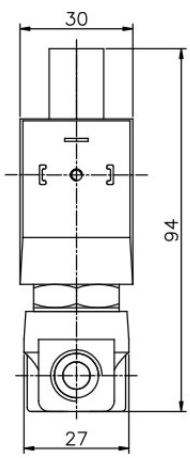

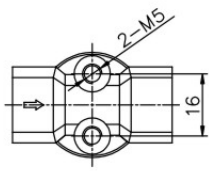

Body 1 N.W=0.40KG
Body 3 N.W=0.35KG

USLV1 Normally closed type (SS316)

Pipe Conn -ection NPT	Orifice mm		CV Factor		Operating pressure differential (PSI)					Max. Fluids Temp.	Power consumption		Model Code 110VAC NPT Seal Material:NBR
					Min.	Max.							
	Body	Top	Body	Top		Air Liquids		Light oil ≤20CST			VA AC 110V	W DC 24V	Body material
						AC	DC	AC	DC				S.S.
1/8"	1.5	1.2	0.07	0.05	0	145	145	145	145	80	20	17	USLV1DH01N3AV1N
	2.0	1.2	0.14	0.05	0	90	90	90	90	80	20	17	USLV1DH01N3AV2N
	2.5	1.2	0.21	0.02	0	60	60	60	60	80	20	17	USLV1DH01N3AV3N
	3.0	1.2	0.23	0.05	0	45	45	45	45	80	20	17	USLV1DH01N3AV4N
1/4"	1.5	1.2	0.07	0.05	0	145	145	145	145	80	20	17	USLV1DH01N3BV1N
	2.0	1.2	0.14	0.05	0	90	90	90	90	80	20	17	USLV1DH01N3BV2N
	2.5	1.2	0.21	0.02	0	60	60	60	60	80	20	17	USLV1DH01N3BV3N
	3.0	1.2	0.23	0.05	0	45	45	45	45	80	20	17	USLV1DH01N3BV4N

Normally closed

De-energized

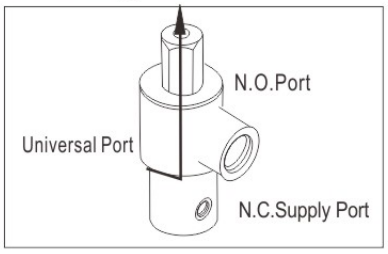

Energized

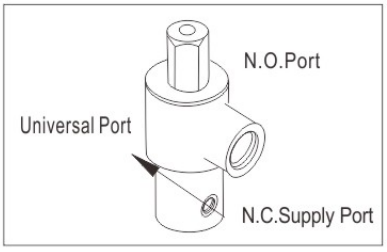

Construction, External Dimensions Chart

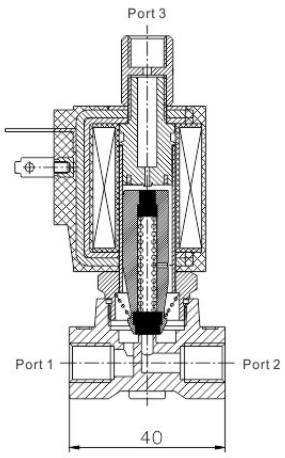

1 & 3 Body Type

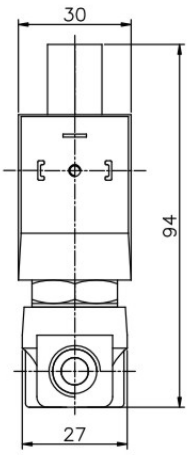

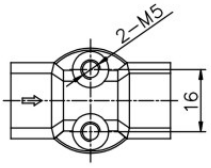

Body 1 N.W=0.40KG
Body 3 N.W=0.35KG

USLV2 Normally Open Type

Pipe Conn -ection NPT	Orifice mm		CV Factor		Operating pressure differential (PSI)					Max. Fluids Temp.	Power consumption		Model Code 110VAC NPT Seal Material:NBR	
					Min.	Max.					VA	W		
	Body	Top	Body	Top		Air Liquids		Light oil ≤20CST			AC 110V	DC 24V	Body material	
						AC	DC	AC	DC				Brass	S.S.
1/8"	1.5	1.2	0.07	0.05	0	115	90	115	90	80	20	17	USLV2DH01N1AV1N	USLV2DH01N3AV1N
	2.0	1.2	0.14	0.05	0	115	90	115	90	80	20	17	USLV2DH01N1AV2N	USLV2DH01N3AV2N
	2.5	1.2	0.21	0.02	0	115	90	115	90	80	20	17	USLV2DH01N1AV3N	USLV2DH01N3AV3N
	3.0	1.2	0.23	0.05	0	115	90	115	90	80	20	17	USLV2DH01N1AV4N	USLV2DH01N3AV4N
1/4"	1.5	1.2	0.07	0.05	0	115	90	115	90	80	20	17	USLV2DH01N1BV1N	USLV2DH01N3BV1N
	2.0	1.2	0.14	0.05	0	115	90	115	90	80	20	17	USLV2DH01N1BV2N	USLV2DH01N3BV2N
	2.5	1.2	0.21	0.02	0	115	90	115	90	80	20	17	USLV2DH01N1BV3N	USLV2DH01N3BV3N
	3.0	1.2	0.23	0.05	0	115	90	115	90	80	20	17	USLV2DH01N1BV4N	USLV2DH01N3BV4N

Normally Open

De-energized

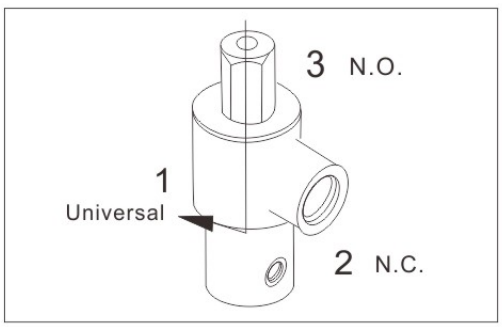

Energized

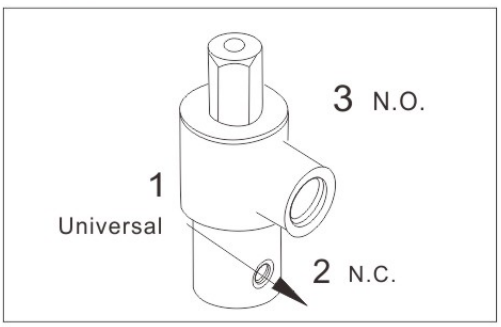

USLV3 Diverting Type

Pipe Conn -ection NPT	Orifice mm		CV Factor		Operating pressure differential (PSI)					Max. Fluids Temp.	Power consumption		Model Code 110VAC NPT Seal Material:NBR	
					Min.	Max.					VA	W		
	Body	Top	Body	Top		Air Liquids		Light oil ≤20CST			AC 110V	DC 24V	Body material	
						AC	DC	AC	DC				Brass	S.S.
1/8"	1.5	1.2	0.07	0.05	0	145	145	145	145	80	20	17	USLV3DH01N1AV1N	USLV3DH01N3AV1N
	2.0	1.2	0.14	0.05	0	145	145	145	145	80	20	17	USLV3DH01N1AV2N	USLV3DH01N3AV2N
	2.5	1.2	0.21	0.02	0	145	145	145	145	80	20	17	USLV3DH01N1AV3N	USLV3DH01N3AV3N
	3.0	1.2	0.23	0.05	0	145	145	145	145	80	20	17	USLV3DH01N1AV4N	USLV3DH01N3AV4N
1/4"	1.5	1.2	0.07	0.05	0	145	145	145	145	80	20	17	USLV3DH01N1BV1N	USLV3DH01N3BV1N
	2.0	1.2	0.14	0.05	0	145	145	145	145	80	20	17	USLV3DH01N1BV2N	USLV3DH01N3BV2N
	2.5	1.2	0.21	0.02	0	145	145	145	145	80	20	17	USLV3DH01N1BV3N	USLV3DH01N3BV3N
	3.0	1.2	0.23	0.05	0	145	145	145	145	80	20	17	USLV3DH01N1BV4N	USLV3DH01N3BV4N

Diverting

De-energized

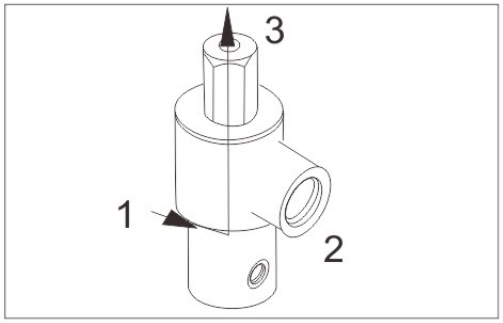

Energized

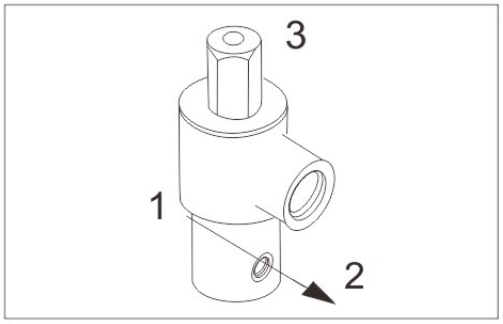

USLV4 Universal Type

Pipe Conn -ection NPT	Orifice mm		CV Factor		Operating pressure differential (PSI)					Max. Fluids Temp.	Power consumption		Model Code 110VAC NPT Seal Material:NBR	
					Min.	Max.					VA	W		
	Body	Top	Body	Top		Air Liquids		Light oil ≤20CST			AC 110V	DC 24V	Body material	
						AC	DC	AC	DC				Brass	S.S.
1/8"	1.5	1.2	0.07	0.05	0	75	45	75	45	80	20	17	USLV4DH01N1AV1N	USLV4DH01N3AV1N
	2.0	1.2	0.14	0.05	0	75	45	75	45	80	20	17	USLV4DH01N1AV2N	USLV4DH01N3AV2N
	2.5	1.2	0.21	0.02	0	75	45	75	45	80	20	17	USLV4DH01N1AV3N	USLV4DH01N3AV3N
	3.0	1.2	0.23	0.05	0	75	45	75	45	80	20	17	USLV4DH01N1AV4N	USLV4DH01N3AV4N
1/4"	1.5	1.2	0.07	0.05	0	75	45	75	45	80	20	17	USLV4DH01N1BV1N	USLV4DH01N3BV1N
	2.0	1.2	0.14	0.05	0	75	45	75	45	80	20	17	USLV4DH01N1BV2N	USLV4DH01N3BV2N
	2.5	1.2	0.21	0.02	0	75	45	75	45	80	20	17	USLV4DH01N1BV3N	USLV4DH01N3BV3N
	3.0	1.2	0.23	0.05	0	75	45	75	45	80	20	17	USLV4DH01N1BV4N	USLV4DH01N3BV4N

Universal

De-energized

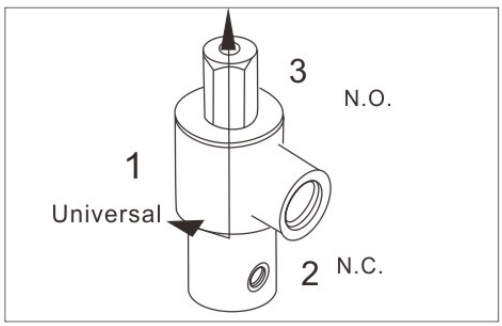

Energized

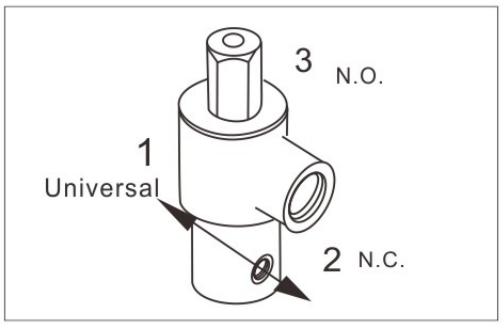

USLV5 Free Exhaust Type

Pipe Conn -ection NPT	Orifice mm		CV Factor		Operating pressure differential (PSI)					Max. Fluids Temp.	Power consumption		Model Code 110VAC NPT Seal Material:NBR
					Min.	Max.							
	Body	Top	Body	Top		Air Liquids		Light oil ≤20CST			VA	W	Body material
						AC	DC	AC	DC		AC 110V	DC 24V	Brass
1/8"	1.5	1.2	0.07	0.05	0	145	145	145	145	80	20	17	USLV5DH01N1AV1N
	2.0	1.2	0.14	0.05	0	115	115	115	115	80	20	17	USLV5DH01N1AV2N
	2.5	1.2	0.21	0.02	0	90	90	90	90	80	20	17	USLV5DH01N1AV3N
	3.0	1.2	0.23	0.05	0	60	60	60	60	80	20	17	USLV5DH01N1AV4N
1/4"	1.5	1.2	0.07	0.05	0	160	160	160	160	80	20	17	USLV5DH01N1BV1N
	2.0	1.2	0.14	0.05	0	130	130	130	130	80	20	17	USLV5DH01N1BV2N
	2.5	1.2	0.21	0.02	0	90	90	90	90	80	20	17	USLV5DH01N1BV3N
	3.0	1.2	0.23	0.05	0	60	60	60	60	80	20	17	USLV5DH01N1BV4N

Free Exhaust

De-energized

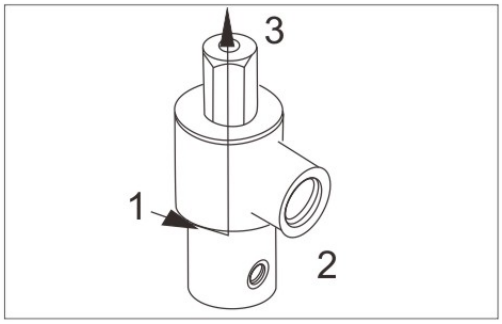

Energized

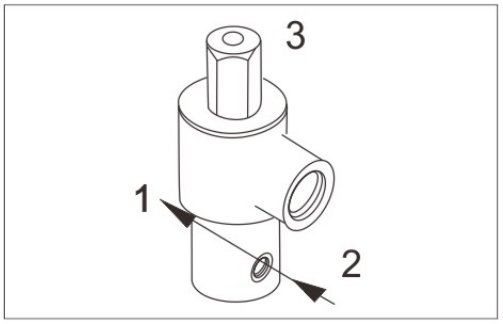

USLV5 Free Exhaust Type

Pipe Conn -ection NPT	Orifice mm		CV Factor		Operating pressure differential (PSI)					Max. Fluids Temp.	Power consumption		Model Code 110VAC NPT Seal Material:NBR
					Min.	Max.					VA	W	
	Body	Top	Body	Top		Air Liquids		Light oil ≤20CST			AC 110V	DC 24V	Body material
						AC	DC	AC	DC				S.S.
1/8"	1.5	1.2	0.07	0.05	0	145	145	145	145	80	20	17	USLV5DH01N3AV1N
	2.0	1.2	0.14	0.05	0	115	115	115	115	80	20	17	USLV5DH01N3AV2N
	2.5	1.2	0.21	0.02	0	75	75	75	75	80	20	17	USLV5DH01N3AV3N
	3.0	1.2	0.23	0.05	0	45	45	45	45	80	20	17	USLV5DH01N3AV4N
1/4"	1.5	1.2	0.07	0.05	0	145	145	145	145	80	20	17	USLV5DH01N3BV1N
	2.0	1.2	0.14	0.05	0	115	115	115	115	80	20	17	USLV5DH01N3BV2N
	2.5	1.2	0.21	0.02	0	75	75	75	75	80	20	17	USLV5DH01N3BV3N
	3.0	1.2	0.23	0.05	0	45	45	45	45	80	20	17	USLV5DH01N3BV4N

Free Exhaust

De-energized

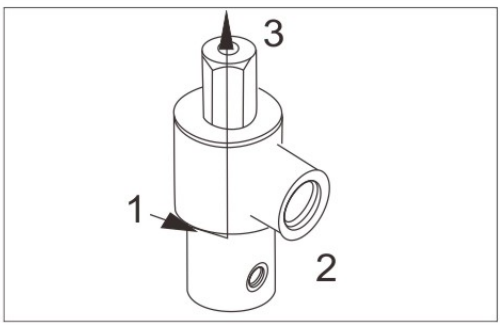

Energized

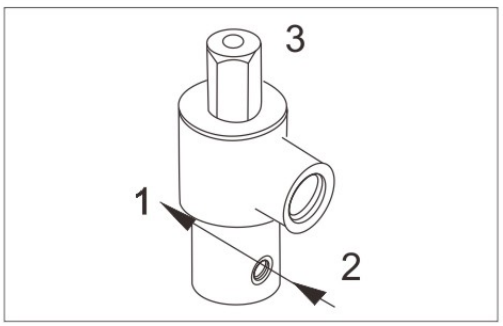

USLT Series 3/2-Way Direct Acting Solenoid Valve

USLT1 Normally Closed
USLT2 Normally Open
USLT3 Universal
USLT4 Diverting



Solenoid Valve Numbering System for Order:

1	2	3	4	5	6	7	8	9	10
Valve Series	Mode of Operation	Coil Type	Coil Class	Voltage	Seals Material	Body Type & Material	Connec-tion	Orifice (mm)	Options
USLT	**1**	**D**	**H**	**01**	**N**	**1**	**A**	**V1**	**N**
	1= Normally Colsed 2= Normally Open 3=Unviersa 4=Diverting	D=DIN Standard Connec-tions,Fully Encapsu-lated	H=H Class (UL)	01= AC110V50Hz/ AC120V60Hz 02= AC220V50Hz/ AC240V60Hz 03=AC36V 05=AC24V 20= AC230V 50/60Hz 12=DC12V 13=DC24V	N=NBR E=EPDM V=VITON	1=Forged Brass 4=Round type SS304 (normal） 9=Forged Brass Round Type 3=Round Type SS316 5=SS316	A=1/8" B=1/4"	V1=1.5 V2=2.0 V3=2.5 V4=3.0 V5=4.0	L=Neon lamp N=NPT Connection Blank is G thread

Item and External Dimensions Chart

Body:Forged Brass

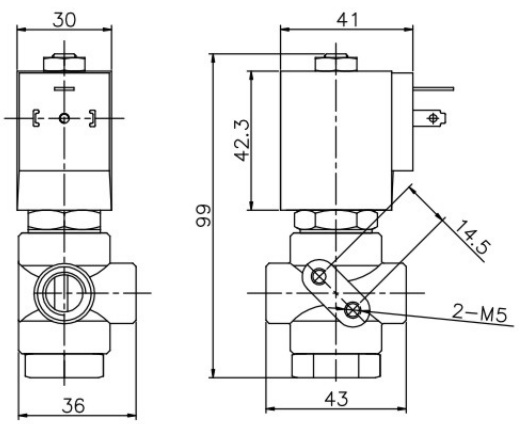

Body:1
Net:0.42kg

Round Body:S.S. Or Brass

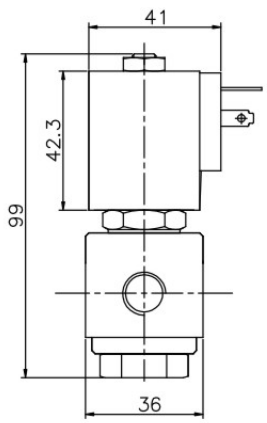

Body:9,4,3
Net:0.49kg

USLT1 Normally Closed Specification List

Pipe Conn -ection NPT	Orifice mm	CV Factor	Operating pressure differential (PSI) Min.	Max.Pressure Air、Liquid AC	Max.Pressure Air、Liquid DC	Max.Pressure Light oil ≤ 20CST AC	Max.Pressure Light oil ≤ 20CST DC	Max. Temp. ℃	Coil Type	Power consumption VA AC 110V	Power consumption W DC 24V	Coil Class	Model Code 110VAC NPT Body material Brass	Model Code 110VAC NPT Body material SS304
1/8"	1.5	0.07	0	190	190	190	190	80	D	20	17	H	USLT1DH01N1AV1N	USLT1DH01N4AV1N
	1.5	0.07	0	190	190	190	190	120	D	20	17	H	USLT1DH01V1AV1N	USLT1DH01V4AV1N
	2.0	0.14	0	160	160	160	160	80	D	20	17	H	USLT1DH01N1AV2N	USLT1DH01N4AV2N
	2.0	0.14	0	160	160	160	160	120	D	20	17	H	USLT1DH01V1AV2N	USLT1DH01V4AV2N
	2.5	0.21	0	130	130	130	130	80	D	20	17	H	USLT1DH01N1AV3N	USLT1DH01N4AV3N
	2.5	0.21	0	130	130	130	130	120	D	20	17	H	USLT1DH01V1AV3N	USLT1DH01V4AV3N
	3.0	0.25	0	90	90	90	90	80	D	20	17	H	USLT1DH01N1AV4N	USLT1DH01N4AV4N
	3.0	0.25	0	90	90	90	90	120	D	20	17	H	USLT1DH01V1AV4N	USLT1DH01V4AV4N
	4.0	0.35	0	50	50	50	50	80	D	20	17	H	USLT1DH01N1AV5N	USLT1DH01N4AV5N
	4.0	0.35	0	50	50	50	50	120	D	20	17	H	USLT1DH01V1AV5N	USLT1DH01V4AV5N
1/4"	1.5	0.07	0	190	190	190	190	80	D	20	17	H	USLT1DH01N1BV1N	USLT1DH01N4BV1N
	1.5	0.07	0	190	190	190	190	120	D	20	17	H	USLT1DH01V1BV1N	USLT1DH01V4BV1N
	2.0	0.14	0	160	160	160	160	80	D	20	17	H	USLT1DH01N1BV2N	USLT1DH01N4BV2N
	2.0	0.14	0	160	160	160	160	120	D	20	17	H	USLT1DH01V1BV2N	USLT1DH01V4BV2N
	2.5	0.21	0	130	130	130	130	80	D	20	17	H	USLT1DH01N1BV3N	USLT1DH01N4BV3N
	2.5	0.21	0	130	130	130	130	120	D	20	17	H	USLT1DH01V1BV3N	USLT1DH01V4BV3N
	3.0	0.25	0	90	90	90	90	80	D	20	17	H	USLT1DH01N1BV4N	USLT1DH01N4BV4N
	3.0	0.25	0	90	90	90	90	120	D	20	17	H	USLT1DH01V1BV4N	USLT1DH01V4BV4N
	4.0	0.35	0	50	50	50	50	80	D	20	17	H	USLT1DH01N1BV5N	USLT1DH01N4BV5N
	4.0	0.35	0	50	50	50	50	120	D	20	17	H	USLT1DH01V1BV5N	USLT1DH01V4BV5N

USLT 1 Normally Closed Energized、De-energized-----Flow Chart

Normally Closed

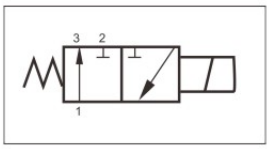

De-energized

Pressure:No.2

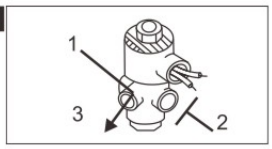

Energized

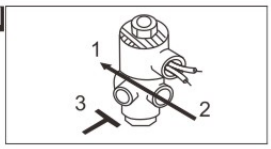

USLT2 Normally Open Specification List

Pipe Conn -ection NPT	Orifice mm	CV Factor	Operating pressure differential (PSI) Min.	Max.Pressure Air、Liquid AC	Max.Pressure Air、Liquid DC	Max.Pressure Light oil ≤ 20CST AC	Max.Pressure Light oil ≤ 20CST DC	Max. Temp. ℃	Coil Type	Power consumption VA AC 110V	Power consumption W DC 24V	Coil Class	Model Code 110VAC NPT Body material Brass	Model Code 110VAC NPT Body material SS304
1/8"	1.5	0.07	0	190	160	190	160	80	D	20	17	H	USLT2DH01N1AV1N	USLT2DH01N4AV1N
	1.5	0.07	0	190	160	190	160	120	D	20	17	H	USLT2DH01V1AV1N	USLT2DH01V4AV1N
	2.0	0.14	0	160	130	160	130	80	D	20	17	H	USLT2DH01N1AV2N	USLT2DH01N4AV2N
	2.0	0.14	0	160	130	160	130	120	D	20	17	H	USLT2DH01V1AV2N	USLT2DH01V4AV2N
	2.5	0.21	0	130	100	130	100	80	D	20	17	H	USLT2DH01N1AV3N	USLT2DH01N4AV3N
	2.5	0.21	0	130	100	130	100	120	D	20	17	H	USLT2DH01V1AV3N	USLT2DH01V4AV3N
	3.0	0.25	0	90	60	90	60	80	D	20	17	H	USLT2DH01N1AV4N	USLT2DH01N4AV4N
	3.0	0.25	0	90	60	90	60	120	D	20	17	H	USLT2DH01V1AV4N	USLT2DH01V4AV4N
	4.0	0.35	0	50	30	50	30	80	D	20	17	H	USLT2DH01N1AV5N	USLT2DH01N4AV5N
	4.0	0.35	0	50	30	50	30	120	D	20	17	H	USLT2DH01V1AV5N	USLT2DH01V4AV5N
1/4"	1.5	0.07	0	190	160	190	160	80	D	20	17	H	USLT2DH01N1BV1N	USLT2DH01N4BV1N
	1.5	0.07	0	190	160	190	160	120	D	20	17	H	USLT2DH01V1BV1N	USLT2DH01V4BV1N
	2.0	0.14	0	160	130	160	130	80	D	20	17	H	USLT2DH01N1BV2N	USLT2DH01N4BV2N
	2.0	0.14	0	160	130	160	130	120	D	20	17	H	USLT2DH01V1BV2N	USLT2DH01V4BV2N
	2.5	0.21	0	130	100	130	100	80	D	20	17	H	USLT2DH01N1BV3N	USLT2DH01N4BV3N
	2.5	0.21	0	130	100	130	100	120	D	20	17	H	USLT2DH01V1BV3N	USLT2DH01V4BV3N
	3.0	0.25	0	90	60	90	60	80	D	20	17	H	USLT2DH01N1BV4N	USLT2DH01N4BV4N
	3.0	0.25	0	90	60	90	60	120	D	20	17	H	USLT2DH01V1BV4N	USLT2DH01V4BV4N
	4.0	0.35	0	50	30	50	30	80	D	20	17	H	USLT2DH01N1BV5N	USLT2DH01N4BV5N
	4.0	0.35	0	50	30	50	30	120	D	20	17	H	USLT2DH01V1BV5N	USLT2DH01V4BV5N

USLT 2 Normally Open Energized、De-energized-----Flow Chart

Normally Open

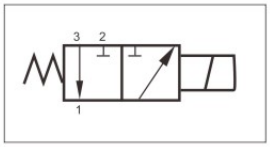

De-energized

Pressure:No.3

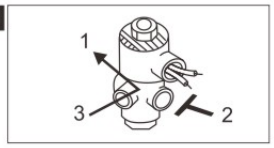

Energized

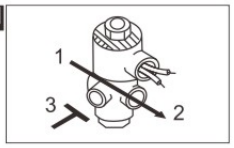

USLT Series 3/2-Way Direct Acting Solenoid Valve

USLT3 Universal Specification List

Pipe Conn -ection NPT	Orifice mm	CV Factor	Operating pressure differential (PSI) Min.	Max.Pressure Air、Liquid AC	Max.Pressure Air、Liquid DC	Max.Pressure Light oil ≤ 20CST AC	Max.Pressure Light oil ≤ 20CST DC	Max. Temp. ℃	Coil Type	Power consumption VA AC 110V	Power consumption W DC 24V	Coil Class	Model Code 110VAC NPT Body material Brass	Model Code 110VAC NPT Body material SS304
1/8"	1.5	0.07	0	100	75	100	75	80	D	20	17	H	USLT3DH01N1AV1N	USLT3DH01N4AV1N
	1.5	0.07	0	100	75	100	75	120	D	20	17	H	USLT3DH01V1AV1N	USLT3DH01V4AV1N
	2.0	0.14	0	75	60	75	60	80	D	20	17	H	USLT3DH01N1AV2N	USLT3DH01N4AV2N
	2.0	0.14	0	75	60	75	60	120	D	20	17	H	USLT3DH01V1AV2N	USLT3DH01V4AV2N
	2.5	0.21	0	60	45	60	45	80	D	20	17	H	USLT3DH01N1AV3N	USLT3DH01N4AV3N
	2.5	0.21	0	60	45	60	45	120	D	20	17	H	USLT3DH01V1AV3N	USLT3DH01V4AV3N
	3.0	0.25	0	35	30	35	30	80	D	20	17	H	USLT3DH01N1AV4N	USLT3DH01N4AV4N
	3.0	0.25	0	35	30	35	30	120	D	20	17	H	USLT3DH01V1AV4N	USLT3DH01V4AV4N
	4.0	0.35	0	25	15	25	15	80	D	20	17	H	USLT3DH01N1AV5N	USLT3DH01N4AV5N
	4.0	0.35	0	25	15	25	15	120	D	20	17	H	USLT3DH01V1AV5N	USLT3DH01V4AV5N
1/4"	1.5	0.07	0	100	75	100	75	80	D	20	17	H	USLT3DH01N1BV1N	USLT3DH01N4BV1N
	1.5	0.07	0	100	75	100	75	120	D	20	17	H	USLT3DH01V1BV1N	USLT3DH01V4BV1N
	2.0	0.14	0	75	60	75	60	80	D	20	17	H	USLT3DH01N1BV2N	USLT3DH01N4BV2N
	2.0	0.14	0	75	60	75	60	120	D	20	17	H	USLT3DH01V1BV2N	USLT3DH01V4BV2N
	2.5	0.21	0	60	45	60	45	80	D	20	17	H	USLT3DH01N1BV3N	USLT3DH01N4BV3N
	2.5	0.21	0	60	45	60	45	120	D	20	17	H	USLT3DH01V1BV3N	USLT3DH01V4BV3N
	3.0	0.25	0	35	30	35	30	80	D	20	17	H	USLT3DH01N1BV4N	USLT3DH01N4BV4N
	3.0	0.25	0	35	30	35	30	120	D	20	17	H	USLT3DH01V1BV4N	USLT3DH01V4BV4N
	4.0	0.35	0	25	15	25	15	80	D	20	17	H	USLT3DH01N1BV5N	USLT3DH01N4BV5N
	4.0	0.35	0	25	15	25	15	120	D	20	17	H	USLT3DH01V1BV5N	USLT3DH01V4BV5N

USLT 3 Universal Energized/De-energized ---Flow Chart

Universal

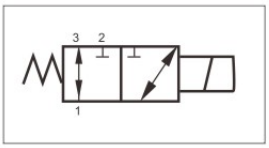

De-energized

Pressure:any port

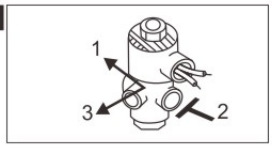

Energized

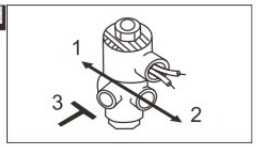

USLT4 Diverting

Pipe Conn -ection NPT	Orifice mm	CV Factor	Operating pressure differential (PSI) Min.	Max.Pressure Air、Liquid AC	Max.Pressure Air、Liquid DC	Max.Pressure Light oil ≤ 20CST AC	Max.Pressure Light oil ≤ 20CST DC	Max. Temp. ℃	Coil Type	Power consumption VA AC 110V	Power consumption W DC 24V	Coil Class	Model Code 110VAC NPT Body material Brass	Model Code 110VAC NPT Body material SS304
1/8"	1.5	0.07	0	190	160	190	160	80	D	20	17	H	USLT4DH01N1AV1N	USLT4DH01N4AV1N
	1.5	0.07	0	190	160	190	160	120	D	20	17	H	USLT4DH01V1AV1N	USLT4DH01V4AV1N
	2.0	0.14	0	160	130	160	130	80	D	20	17	H	USLT4DH01N1AV2N	USLT4DH01N4AV2N
	2.0	0.14	0	160	130	160	130	120	D	20	17	H	USLT4DH01V1AV2N	USLT4DH01V4AV2N
	2.5	0.21	0	130	100	130	100	80	D	20	17	H	USLT4DH01N1AV3N	USLT4DH01N4AV3N
	2.5	0.21	0	130	100	130	100	120	D	20	17	H	USLT4DH01V1AV3N	USLT4DH01V4AV3N
	3.0	0.25	0	90	60	90	60	80	D	20	17	H	USLT4DH01N1AV4N	USLT4DH01N4AV4N
	3.0	0.25	0	90	60	90	60	120	D	20	17	H	USLT4DH01V1AV4N	USLT4DH01V4AV4N
	4.0	0.35	0	50	30	50	30	80	D	20	17	H	USLT4DH01N1AV5N	USLT4DH01N4AV5N
	4.0	0.35	0	50	30	50	30	120	D	20	17	H	USLT4DH01V1AV5N	USLT4DH01V4AV5N
1/4"	1.5	0.07	0	190	160	190	160	80	D	20	17	H	USLT4DH01N1BV1N	USLT4DH01N4BV1N
	1.5	0.07	0	190	160	190	160	120	D	20	17	H	USLT4DH01V1BV1N	USLT4DH01V4BV1N
	2.0	0.14	0	160	130	160	130	80	D	20	17	H	USLT4DH01N1BV2N	USLT4DH01N4BV2N
	2.0	0.14	0	160	130	160	130	120	D	20	17	H	USLT4DH01V1BV2N	USLT4DH01V4BV2N
	2.5	0.21	0	130	100	130	100	80	D	20	17	H	USLT4DH01N1BV3N	USLT4DH01N4BV3N
	2.5	0.21	0	130	100	130	100	120	D	20	17	H	USLT4DH01V1BV3N	USLT4DH01V4BV3N
	3.0	0.25	0	90	60	90	60	80	D	20	17	H	USLT4DH01N1BV4N	USLT4DH01N4BV4N
	3.0	0.25	0	90	60	90	60	120	D	20	17	H	USLT4DH01V1BV4N	USLT4DH01V4BV4N
	4.0	0.35	0	50	30	50	30	80	D	20	17	H	USLT4DH01N1BV5N	USLT4DH01N4BV5N
	4.0	0.35	0	50	30	50	30	120	D	20	17	H	USLT4DH01V1BV5N	USLT4DH01V4BV5N

USLT 4 Universal Energized/De-energized ---Flow Chart

Diverting

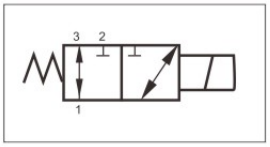

De-energized

Pressure:any port NO.1

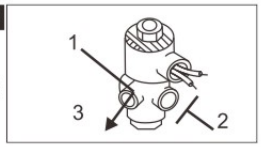

Energized

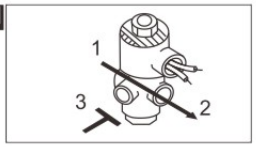

Solenoid Valve Numbering System for Order

1	2	3	4	5	6	7	8	9	10
Valve Series	Mode of Operation	Coil Type	Coils Class	Voltage	Seals Material	Body Type & Material	Connec -tion	Orifice (mm)	Options
USAV	**1**	**D**	**H**	**01**	**N**	**8**	**B**	**09**	**N**
	1= Normally Closed	D=DIN Standard Connec-tions,Fully Encapsu-lated	H=H Class (UL)	01= AC110V50Hz/ AC120V60HZ 02= AC220 V50Hz/ AC240 V60Hz 03= AC36V 05= AC24V 20= AC230V 50/60Hz 12=DC12V 13=DC24V	V=VITON	8=Aluminium	B=1/4" C=3/8" D=1/2"	06=6.0 09=9.0	L=Neon lamp N=NPT Connection Blank is G thread

USAV Direct Acting Gas Solenoid Valve

SAV series gas solenoid valve used in the Burner,Hear Equipment, Industrial Furnace and so on of the gas or air media.So as to achieve the procedure control or long-distance control of systems and equipment.

Body material:Aluminium Seals Material: VITON

Ambient Temp:-10℃~65℃； Fluids Temp：0℃~120℃

voltage: AC110V/50Hz ; AC120/60Hz;
AC220V/50Hz; AC240V/60Hz,
AC230V 50/60Hz; AC36V 50/60Hz;
AC24V 50/60Hz;DC24V;DC12V ±10%

Flow as the arrow .mounts in any position ;Best position is Solenoid vertical and upright diriction.





Construction, External Dimensions Chart

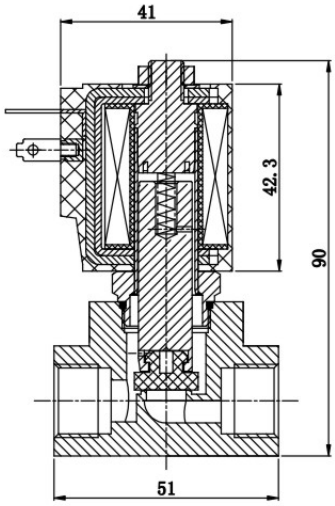

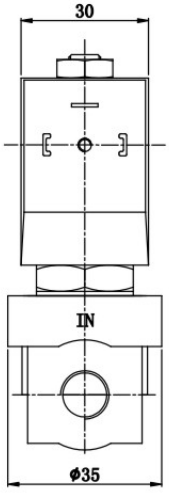

valve slection list

Connection NPT	Orifice (mm)	CV Factor	Operating pressure differential (PSI)		Coil Type	Power Consumption		Coil Type	External Dimensions Length xWidth x Height A x B x H	Model Code 110VAC NPT	Weight (KG)
			Min	Max		VA AC 110V	W DC 24V				
1/4"	6	1.0	0	10	D	20	17	H	51×35×91	USAV1DH01V8B06N	0.3
3/8"	6	1.2	0	10	D	20	17	H	51×35×91	USAV1DH01V8C06N	0.3
1/2"	6	1.2	0	10	D	20	17	H	51×35×91	USAV1DH01V8D06N	0.3
1/4"	9	1.2	0	10	D	20	17	H	51×35×91	USAV1DH01V8B09N	0.3
3/8"	9	1.4	0	10	D	20	17	H	51×35×91	USAV1DH01V8C09N	0.3
1/2"	9	1.4	0	10	D	20	17	H	51×35×91	USAV1DH01V8D09N	0.3

Solenoid Valves Numbering System for Order

1	2	3	4	5	6	7	8	9	10	11
Valve Series	Mode of Operation	Coil Type	Coil Class	Voltage	Seal Material	Body Material	Pipe Size	Orifice (ϕ mm)	Manifold	Options
USLE	**1**	**D**	**H**	**01**	**N**	**8**	**A**	**02**	**N4**	**N**
	1= Normally Closed	D=DIN Standard Connections, Fully Encapsulated	H=H Class (UL)	01= AC110 V50Hz/ AC120 V60HZ 02= AC220 V50Hz/ AC240 V60Hz 03= AC36V 05= AC24V 20= AC230V 50/60Hz 12= DC12V 13= DC24V	N=NBR E=EPDM V=VITON	1= Brass 8=Aluminium (Standard)	A=1/8" B=1/4" C=3/8" D=1/2"	02=2.0 03=3.0 04=4.0 05=5.0 06=6.0 09=9.0	N2=2Pcs N3=3Pcs N4=4Pcs N5=5Pcs	L=Neon lamp N=NPT Connection Blank is G thread

2-Way normally closed solenoid valve; closed when de-energized，open when energized。

Flow as the arrow One inlet many outlets(N)

Body material: brass (standard), aluminum (special made)

Ambient Temp：-10℃~65℃ Fluids Temp：0℃~120℃

voltage：AC110V/50Hz ; AC120/60Hz;
AC220V/50Hz； AC240V/60Hz,
AC230V 50/60Hz; AC36V 50/60Hz;
AC24V 50/60Hz;DC24V;DC12V ±10%

Flow as the arrow .mounts in any position ;Best position is Solenoid vertical and upright diriction.



External Dimensions

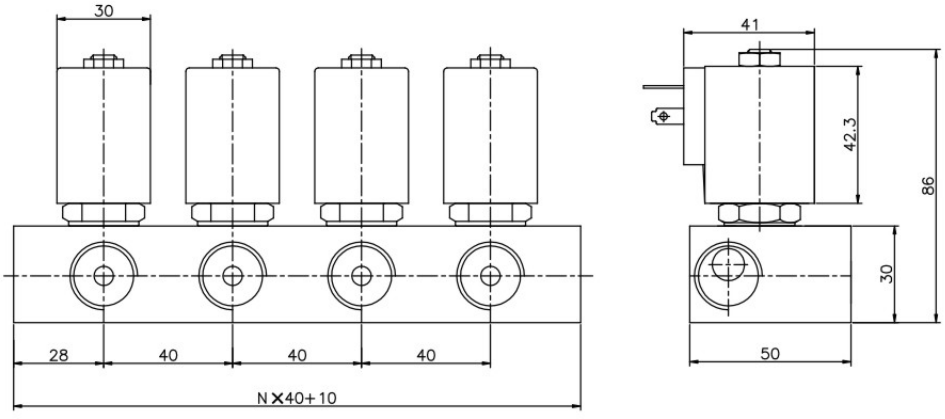

Valve Selection List

Pipe Connection NPT	Orifice mm	CV Factor	Operating pressure differential (PSI) Min.	Max. Air AC	Max. Air DC	Max. Liquids AC	Max. Liquids DC	Max. Steam AC	Max. Steam DC	Max. Fluids Temp.	Coil Type	Power consumption VA AC 110V	Power consumption W DC 24V	Coil Class	Model Code 110VAC NPT
1/8"	2.0	0.15	0	290	290	290	220	220	145	120	D	20	17	H	USLE1DH01V8A02N
	3.0	0.23	0	145	145	145	145	100	100	120	D	20	17	H	USLE1DH01V8A03N
	4.0	0.44	0	100	100	100	75	75	75	120	D	20	17	H	USLE1DH01V8A04N
	5.0	0.5	0	60	35	60	35	35	35	120	D	20	17	H	USLE1DH01V8A05N
1/4"	2.0	0.15	0	290	290	290	220	220	145	120	D	20	17	H	USLE1DH01V8B02N
	3.0	0.23	0	145	145	145	145	100	100	120	D	20	17	H	USLE1DH01V8B03N
	4.0	0.44	0	100	100	100	75	75	75	120	D	20	17	H	USLE1DH01V8B04N
	5.0	0.5	0	60	35	60	35	35	35	120	D	20	17	H	USLE1DH01V8B05N
3/8"	5.0	0.5	0	60	35	60	35	35	35	120	D	20	17	H	USLE1DH01V8C05N
	6.0	0.8	0	45	45	45	20	30	15	120	D	20	17	H	USLE1DH01V8C06N
	9.0	1.65	0	15	15	10	5	5	5	120	D	20	17	H	USLE1DH01V8C09N
1/2"	5.0	0.5	0	60	35	60	35	35	35	120	D	20	17	H	USLE1DH01V8D05N
	6.0	0.8	0	45	45	45	20	30	15	120	D	20	17	H	USLE1DH01V8D06N
	9.0	1.65	0	15	15	10	5	5	5	120	D	20	17	H	USLE1DH01V8D09N

USLE Series Manifold Type Series Solenoid Valve <Normally Closed>

2-way solenoid valve normally closed,closed when de-energized, open when energized.

One inlet many outlets(n); two inlets many outlets(n)

Body material:brass Internal component: stainless steel Orifice:Φ10.0mm

Connection: outlet connection: 1/4" 3/8" 1/2"
inlet connection: 1/2"

Operating pressure: 0-190PSI

Ambient Temp: -10℃~65℃ Fluids Temp: 0℃~120℃

Voltage: AC110V/50Hz ; AC120/60Hz;
AC220V/50Hz; AC240V/60Hz,
AC230V 50/60Hz; AC36V 50/60Hz;
AC24V 50/60Hz;DC24V;DC12V ±10%

Flow as the arrow .mounts in any position ;Best position is Solenoid vertical and upright diriction.



Solenoid Valve Numbering System for Order

1	2	3	4	5	6	7	8	9	10	11
Valve Series	Mode of Operation	Coil Type	Coils Class	Voltage	Seal Material	Body Material	Pipe Size	Orifice (Φ mm)	Comp-osition	Options
USLE	1	D	H	01	N	1	B	10	N4	N
	1= Normally Closed	D=DIN Standard Connections, Fully Encapsulated	H=H Class (UL)	01= AC110V50Hz/ AC120V60HZ 02= AC220V50Hz/ AC240V60Hz 03= AC36V 05= AC24V 20= AC230V 50/60Hz 12= DC12V 13= DC24V	N=NBR E=EPDM V=VITON	1=Forged Brass	B=1/2" × 1/4" C=1/2" × 3/8" D=1/2" × 1/2"	10=10.0	N2=2Pcs N3=3Pcs N4=4Pcs N5=5Pcs	L=Neon lamp N=NPT Connection Blank is G thread

External Dimensions

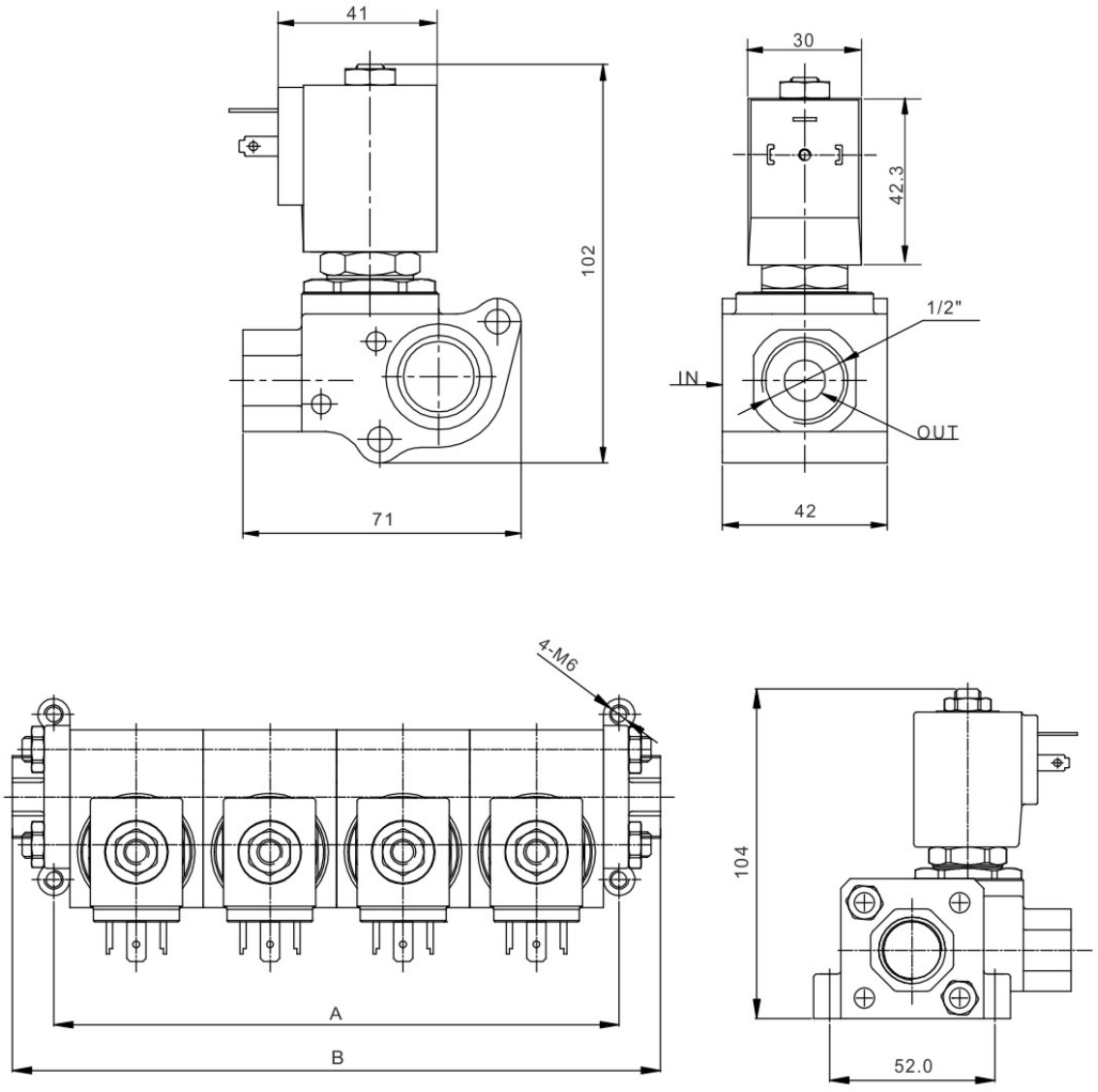

composition NO	2	3	4	5	6	7	8
A	94	136	178	220	262	304	346
B	120	162	204	246	288	330	372
Weight KG	1.9	2.7	3.5	4.4	5.2	5.9	6.8

USLJ Plate-Type，Integrated Series Solenoid Valve <*Normally Closed*>

USLJ1 Normally Closed 3/2-way Series

USLJ2 Normally Open 3/2-way Series

USLJ3 Universal 3/2-way Series

USLJ4 2/2-way Series

Product Characteristics

SLJ 3/2-way Series solenoid valve structure compact, Installed in integrated plate, Realize the piping to be not moved, Optional installation exchange solenoid valves, According to the requirement of customer mix of integration (At the same time,install 2/2-way and 3/2-way solenoid valve on one plate), This product widely used for cylinder、 valve etc implementation of the automatic control and air compressor.



Solenoid Valves Numbering System for Order

1	2	3	4	5	6	7	8	9	10
Valve Series	Mode of Operation	Coil Type	Coil Class	Voltage	Seal Material	Body Material	Pipe Size	Orifice (ϕ mm)	Options
USLJ	**1**	**D**	**H**	**01**	**N**	**9**	**J**	**C2**	**N**
	1= Normally Closed 2= Normally Open 3= Universal 3/2-way Serie 4=2/2-way Series	D=DIN Standard Connections, Fully Encapsulated	H=H Class (UL)	01= AC110V50Hz/ AC120V60HZ 02= AC220V50Hz/ AC240V60Hz 03=AC36V 05=AC24V 20=AC230V 50/60Hz 12=DC12V 13=DC24V	N=NBR E=EPDM V=VITON	9=Forged Brass	J=Install in integrated plate	C2=1.5 02=2.0 C3=2.5	L=Neon lamp Blank is G thread

USLJ1 Normally Closed 3/2-way Series Selection List

Orifice (mm)		CV Factor		Operating pressure differential (PSI)							Coil Type	Power		Coil Class	Model Code 110VAC	Weight (KG)
				Min	Max.							VA	W			
Valve bady	Top	Valve bady	Top		Air Gas		Water Liquids		Light oil ≤20CST			AC 110V	DC 24V			
					AC	DC	AC	DC	AC	DC					Brass	
1.2	1.5	0.05	0.05	0	230	230	230	230	230	230	D	20	17	H	USLJ1DH01N9JC1	0.28
1.2	1.5	0.05	0.05	0	230	230	230	230			D	20	17	H	USLJ1DH01E9JC1	0.28
1.2	1.5	0.05	0.05	0	230	230	230	230	230	230	D	20	17	H	USLJ1DH01V9JC1	0.28
1.5	1.5	0.07	0.05	0	145	115	145	115	145	115	D	20	17	H	USLJ1DH01N9JC2	0.28
1.5	1.5	0.07	0.05	0	145	115	145	115			D	20	17	H	USLJ1DH01E9JC2	0.28
1.5	1.5	0.07	0.05	0	145	115	145	115	145	115	D	20	17	H	USLJ1DH01V9JC2	0.28

De-energized & Energized-Flow Chart

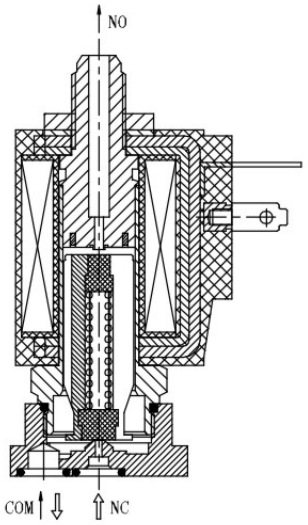

Configuration dimension chart

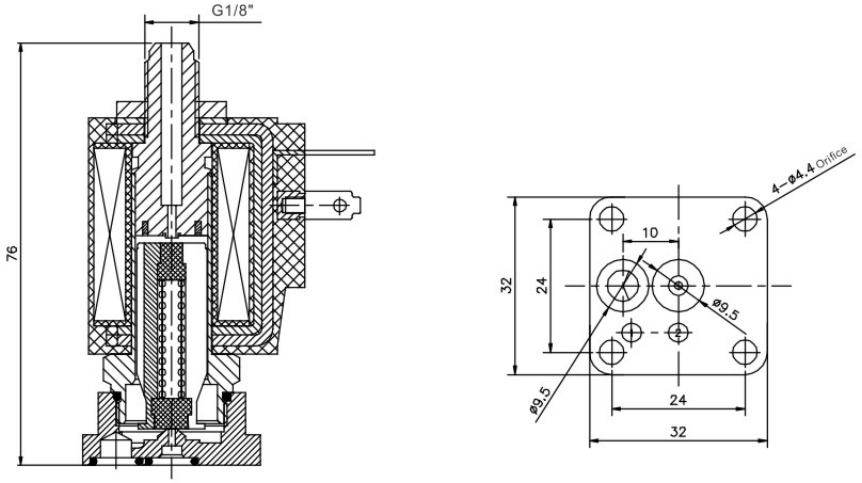

USLJ2 Normally Open 3/2-way Series Selection List

Orifice (mm)		CV Factor		Operating pressure differential (PSI)							Coil Type	Power		Coil Class	Model Code 110VAC	Weight (KG)
				Min	Max.							VA	W			
					Air Gas		Water Liquids		Light oil ≤20CST							
Valve bady	Top	Valve bady	Top		AC	DC	AC	DC	AC	DC		AC 110V	DC 24 V		Brass	
1.2	1.5	0.05	0.05	0	230	175	230	175	230	175	D	20	17	H	USLJ2DH01N9JC1	0.28
1.2	1.5	0.05	0.05	0	230	175	230	175			D	20	17	H	USLJ2DH01E9JC1	0.28
1.2	1.5	0.05	0.05	0	230	175	230	175	230	175	D	20	17	H	USLJ2DH01V9JC1	0.28
1.5	1.5	0.07	0.05	0	145	115	145	115	145	115	D	20	17	H	USLJ2DH01N9JC2	0.28
1.5	1.5	0.07	0.05	0	145	115	145	115			D	20	17	H	USLJ2DH01E9JC2	0.28
1.5	1.5	0.07	0.05	0	145	115	145	115	145	115	D	20	17	H	USLJ2DH01V9JC2	0.28

De-energized & Energized-Flow Chart

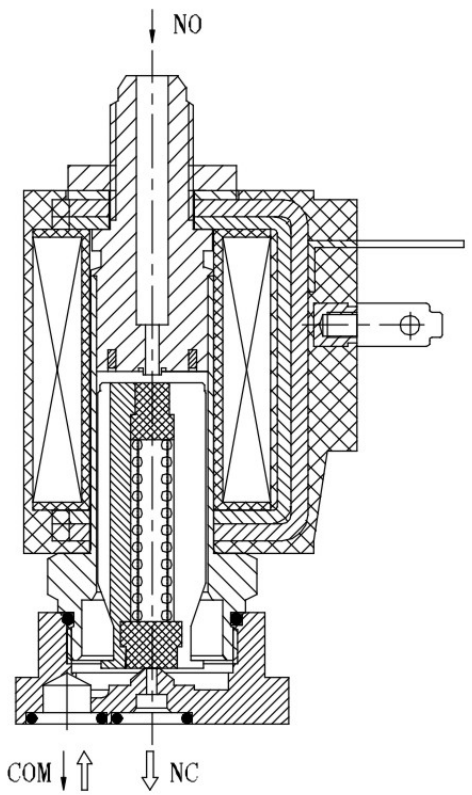

USLJ3 Universal 3/2-way Series Selection List

Orifice (mm)		CV Factor		Operating pressure differential (PSI)							Coil Type	Power		Coil Class	Model Code 110VAC	Weight (KG)
				Min	Max.							VA	W			
Valve bady	Top	Valve bady	Top		Air Gas		Water Liquids		Light oil ≤20CST			AC 110V	DC 24V			
					AC	DC	AC	DC	AC	DC					Brass	
1.2	1.5	0.05	0.05	0	145	145	145	145	115	115	D	20	17	H	USLJ3DH01N9JC1	0.28
1.2	1.5	0.05	0.05	0	145	145	145	145			D	20	17	H	USLJ3DH01E9JC1	0.28
1.2	1.5	0.05	0.05	0	145	145	145	145	115	115	D	20	17	H	USLJ3DH01V9JC1	0.28
1.5	1.5	0.07	0.05	0	100	100	100	100	90	90	D	20	17	H	USLJ3DH01N9JC2	0.28
1.5	1.5	0.07	0.05	0	100	100	100	100			D	20	17	H	USLJ3DH01E9JC2	0.28
1.5	1.5	0.07	0.05	0	100	100	100	100	90	90	D	20	17	H	USLJ3DH01V9JC2	0.28

De-energized & Energized-Flow Chart

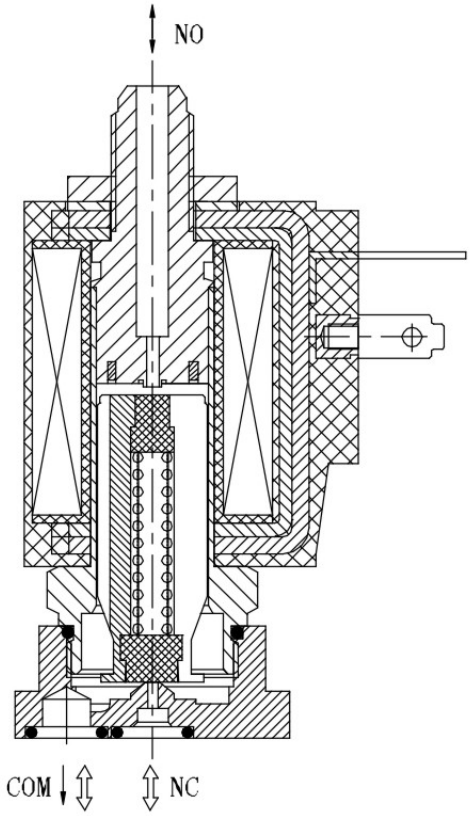

USLJ4 2/2-way Series Selection List

Orifice (mm)	CV Factor	Operating pressure differential (PSI)							Coil Type	Power		Coil Class	Model Code 110VAC	Weight (Kg)
		Min	Max.							VA	W			
			Air		Liquids		Light oil ≤20CST			AC 110V	DC 24V			
			AC	DC	AC	DC	AC	DC					Brass	
1.2	0.05	0	365	365	365	365	365	365	D	20	17	H	USLJ4DH01N9JC1	0.28
1.2	0.05	0	365	365	365	365			D	20	17	H	USLJ4DH01E9JC1	0.28
1.2	0.05	0	365	365	365	365	365	365	D	20	17	H	USLJ4DH01V9JC1	0.28
1.5	0.07	0	305	305	305	305	305	305	D	20	17	H	USLJ4DH01N9JC2	0.28
1.5	0.07	0	305	305	305	305			D	20	17	H	USLJ4DH01E9JC2	0.28
1.5	0.07	0	305	305	305	305	305	305	D	20	17	H	USLJ4DH01V9JC2	0.28

De-energized & Energized-Flow Chart

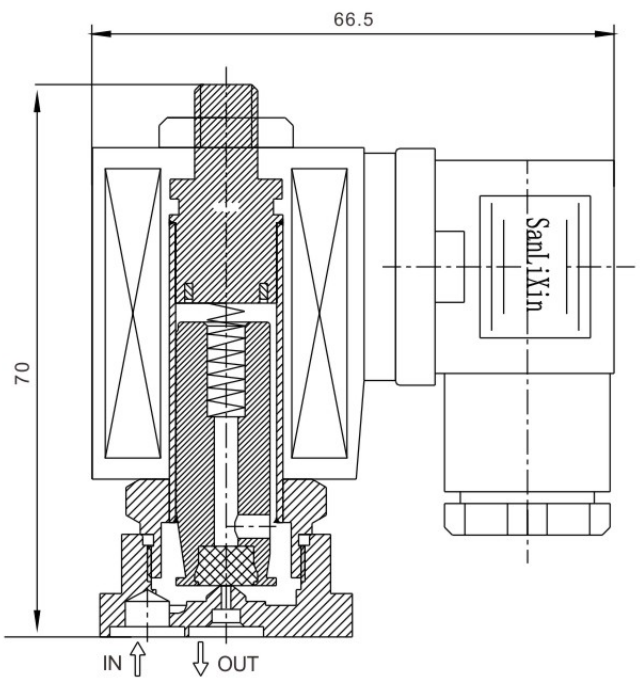

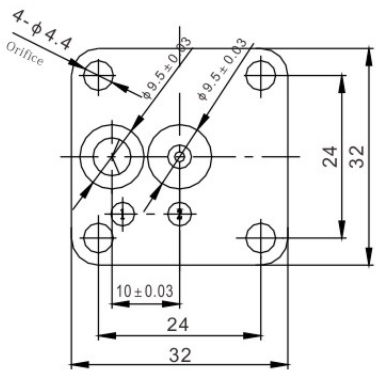

USLY Series 2/2-Way Solenoid Valve

2-Way normally open solenoid valve, Open when de-energized, Closed when energized.

Serialized products, small in size, high flow rate, wide usage

Body material: forged brass.304 stainless steel.

Orifice：Φ1.0-Φ2.5mm

Working pressure：0-435PSI

Ambient Temp：-10℃~65℃ Fluids Temp：0℃~120℃

voltage：AC110V/50Hz ; AC120/60Hz;
AC220V/50Hz； AC240V/60Hz,
AC230V 50/60Hz; AC36V 50/60Hz;
AC24V 50/60Hz;DC24V;DC12V ±10%

Flow as the arrow. mounts in any position.



Construction, External Dimensions Chart

1	2	3	4	5	6	7	8	9	10	11
Valve Series	Mode of Operation	Coil Type	Coil Class	Voltage	Seal Material	Body Material	connect size	Orifice (mm)	Options	Options
USLY	2	D	H	01	N	1	A	C2	A	N
	2= Normally open	D= DIN Standard Connections, Fully Encapsulated	H=H Class (UL)	01= AC110V50Hz/ AC120V60HZ 02= AC220V50Hz/ AC240V60Hz 03=AC36V 05=AC24V 20=AC230V 50/60Hz 12=DC12V 13=DC24V	N=NBR E=EPDM V=VITON	1=brass 4=SS304	A=1/8" B=1/4"	01=1.0 C1=1.2 C2=1.5 C2=2.0 C3=2.5	A=Thread in body B=Thread out body	L=Neon lamp N=NPT Connection Blank is G thread

Valve Selection List

Connect	Orifice mm	Operating pressure differential (PSI)			Coil Type	Coil power		Coil Class	Model Code 110VAC	Weight kg
		Min.	Max.			VA	W			
			Air	Liquids		AC 110V	DC 24V			
1/8"	1.0	0	435	435	D	20	17	H	USLY2DH01N1A01	0.25
1/8"	1.2	0	435	435	D	20	17	H	USLY2DH01N1AC1	0.25
1/8"	1.5	0	435	435	D	20	17	H	USLY2DH01N1AC2	0.25
1/8"	2.0	0	190	145	D	20	17	H	USLY2DH01N1A02	0.25
1/8"	2.5	0	160	115	D	20	17	H	USLY2DH01N1AC3	0.25

External Dimensions

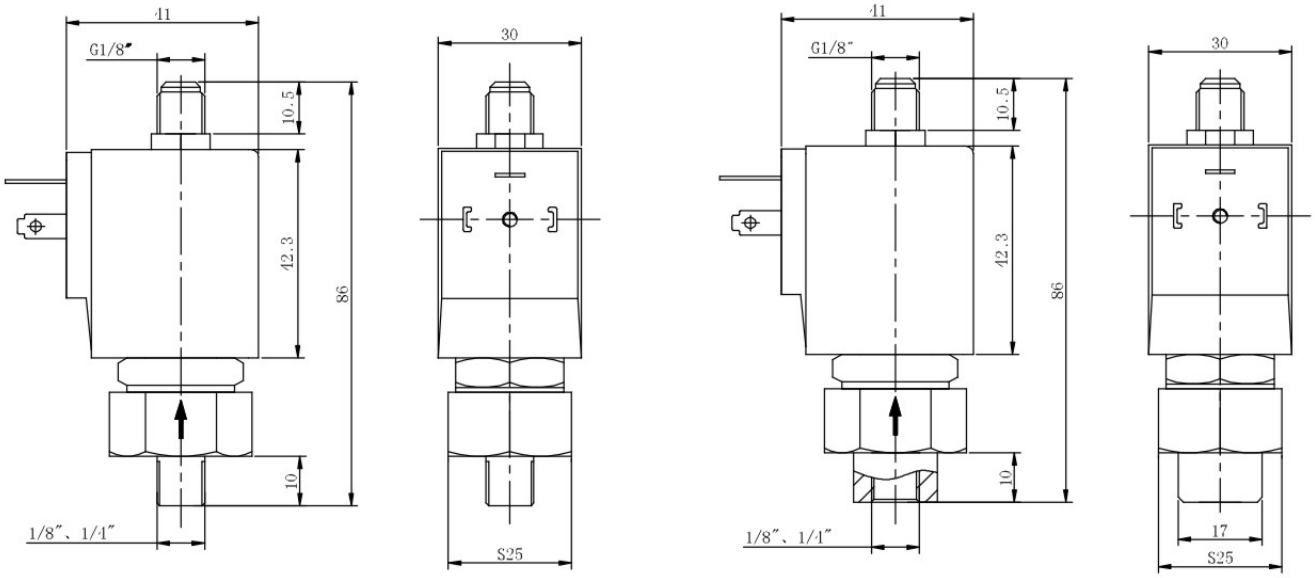

Construction, External Dimensions Chart

1	2	3	4	5	6	7	8	9	10
Valve Series	Mode of Operation	Coil Type	Coil Class	Voltage	Seal Material	Body Material	connect size	Orifice (mm)	Options
WZS	**1**	**D**	**F**	**02**	**E**	**1**	**E**	**20**	
	1= Normally Closed	D= DIN Standard Connections, Fully Encapsulated	F=F Class	02= AC220V AC230V AC240V 01= AC110V AC120V 05= AC24V 12= DC12V 13= DC24V	E= EPDM	9=brass	B=1/4″ C=3/8″ D=1/2″	10=10.0 13=13.0	N=NPT Connection P=PT R=RC Blank is G thread
						1=brass	C=3/8″ D=1/2″	15=15.0	
							E=3/4″	20=20.0	
							G=1″	20=20.0 25=25.0	

WZS Series 2/2-Way Direct Acting Solenoid Valve <Normally Closed>

2-Way normally open solenoid valve, open when de-energized,Closed when energized.

Max.Allowable pressure: 25 bar

Working pressure: 0-8 bar

Ambient Temp: -10-65℃

Voltage: AC110V/50Hz ; AC120/60Hz;
AC220V/50Hz; AC240V/60Hz,
AC230V 50/60Hz; AC36V 50/60Hz;
AC24V 50/60Hz;DC24V;DC12V ±10%

Flow as the arrow ,mounts in any position ; best position is solenoid vertical and upright direction



External Dimensions

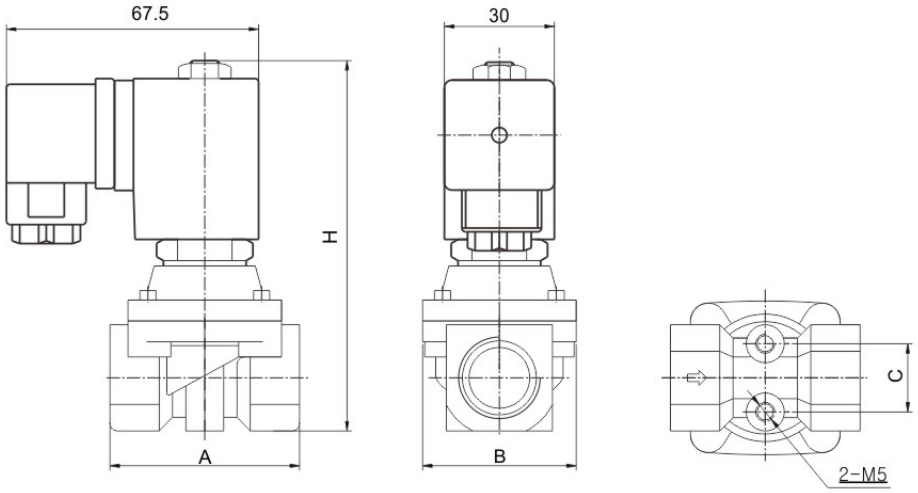

Valve Selection List

Pipe Connection	Orifice mm	CV Factor	Operating pressure differential (BAR) Min.	Max. Air AC	Max. Air DC	Max. liquid AC	Max. liquid DC	Max. Temp. ℃	Coil Type	Power consumption VA AC 110V	Power consumption W DC 24V	Coil Class	External Dimensions Length x Width x Height L x B x H	Model Code 220VAC	Weight (KG)
1/4"	10	1.9	0	8	8	8	8	120	D	22	13	F	50x40.5x98	WZS1DF02E9B10	0.55
3/8"	10	2.4	0	8	8	8	8	120	D	22	13	F	50x40.5x98	WZS1DF02E9C10	0.54
	13	3.1	0	8	8	8	8	120	D	22	13	F	55x43x98	WZS1DF02E9C13	0.56
1/2"	10	2.4	0	8	8	8	8	120	D	22	13	F	50x40.5x98	WZS1DF02E9D10	0.53
	13	3.1	0	8	8	8	8	120	D	22	13	F	55x43x98	WZS1DF02E9D13	0.55

2-Way normally closed solenoid valve, Closed when de-energized, open when energized.

Ambient Temp.:-10℃~65℃ Fluids Temp. :0℃~120℃

Voltage: AC110V/50Hz ; AC120/60Hz;
AC220V/50Hz ; AC240V/60Hz,
AC230V 50/60Hz ; AC36V 50/60Hz;
AC24V 50/60Hz ; DC24V ; DC12V ±10%

Flow as the arrow, mounts in any position; Best position is Solenoid vertical and upright direction.



External Dimensions

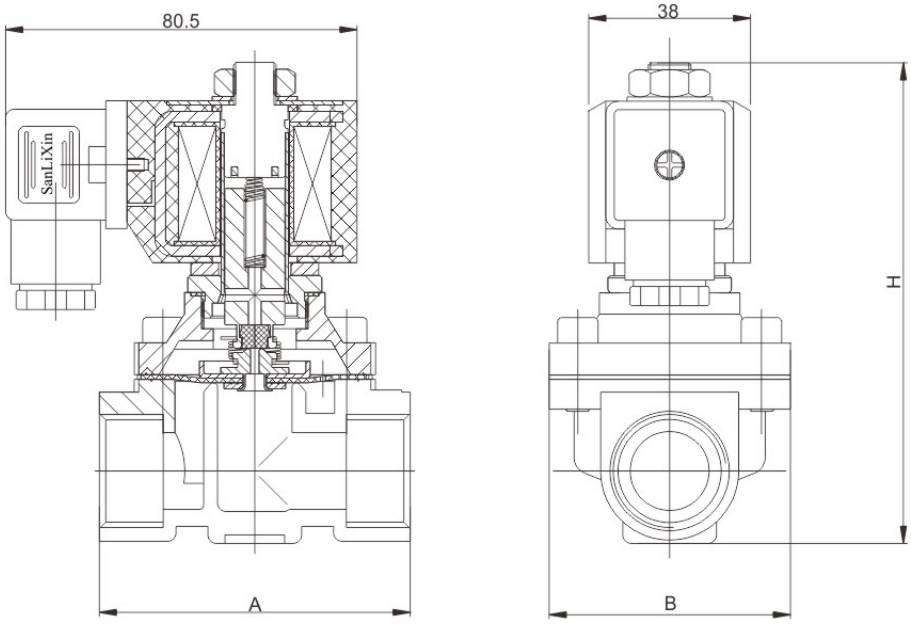

Valve Selection List

Pipe Connection	Orifice mm	CV Factor	Operating pressure differential (BAR) Min.	Max. Air AC	Max. Air DC	Max. liquid AC	Max. liquid DC	Max. Temp. ℃	Coil Type	Power consumption VA AC 110V	Power consumption W DC 24V	Coil Class	External Dimensions Length x Width x Height L x B x H	Model Code 220VAC	Weight (KG)
3/8"	15	4.8	0	8	6	8	6	120	D	20	20	F	69x57x106	WZS1DF02E1C16	0.9
1/2"	15	4.8	0	8	6	8	6	120	D	20	20	F	69x57x106	WZS1DF02E1D16	0.9
3/4"	20	7.6	0	8	6	8	6	120	D	20	20	F	73x57x114	WZS1DF02E1E20	1.1
1"	20	7.6	0	8	6	8	6	120	D	20	20	F	80x62x117	WZS1DF02E1G20	1.2
	25	12	0	8	6	8	6	120	D	20	20	F	99x77x121	WZS1DF02E1G25	1.4

Construction, External Dimensions Chart

1	2	3	4	5	6	7	8	9	10
Valve Series	Mode of Operation	Coil Type	Coil Class	Voltage	Seal Material	Body Material	connect size	Orifice (mm)	Options
WSLP	**1**	**D**	**F**	**02**	**E**	**1**	**E**	**20**	
	1= Normally Closed	D= DIN Standard Connections, Fully Encapsulated	F=F Class	02= AC220V AC230V AC240V 01= AC110V AC120V 05= AC24V 12= DC12V 13= DC24V	E= EPDM	1=brass	A=1/8″ B=1/4″ C=3/8″	03=3.0	N=NPT Connection P=PT R=RC Blank is G thread
							C=3/8″ D=1/2″	13=13.0	
							E=3/4″	20=20.0	
							G=1″	20=20.0 25=25.0	

2/2 way normally closed , closed when de-energized , open when energized

Body material: forged brass.

Ambient Temp:-10℃~65℃, Fluids Temp:0℃~120℃

Voltage: AC110V/50Hz ; AC120/60Hz;AC220V/50Hz;
AC240V/60Hz,AC230V 50/60Hz; AC36V 50/60Hz;
AC24V 50/60Hz;DC24V;DC12V ±10%

Flow as the arrow, mounts in any position;
best position is upright direction



External Dimensions

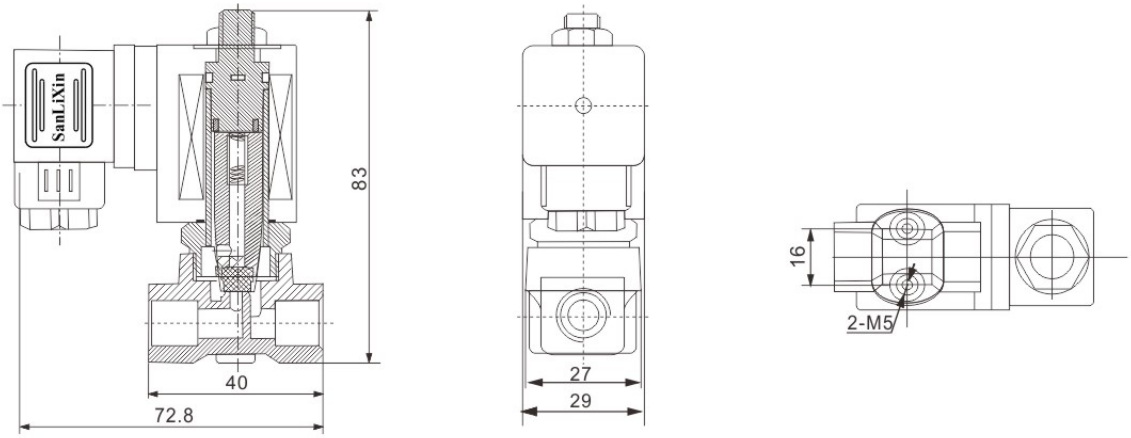

Valve Selection List

Pipe Connection	Orifice mm	CV Factor	Operating pressure differential (BAR) Min.	Max. Air Gas AC	Max. Air Gas DC	Max. Water hot water liquid AC	Max. Water hot water liquid DC	Max. Temp. ℃	Coil Type	Power consumption VA AC 110V	Power consumption W DC 24V	Coil Class	Model Code 220VAC NPT	Weight KG
1/8"	3	0.25	0	10	10	10	10	120	D	22	13	F	WSLP1DF02E1A03	0.37
1/4"	3	0.25	0	10	10	10	10	120	D	22	13	F	WSLP1DF02E1B03	0.36
3/8"	3	0.25	0	10	10	10	10	120	D	22	13	F	WSLP1DF02E1C03	0.34

WSLP Series 2/2-Way Large Diameter Pilot Operated Solenoid Valve<*Normally Closed*>

2-Way normally closed solenoid valve, Closed when de-energized, open when energized.

Serialized products, small in size, high flow rate, wide usage

Body material: forged brass. Max. Allowable pressure 20 bar

Ambient Temp:-10℃~65℃ Fluids Temp: 0℃~120℃

Voltage: AC110V/50Hz ; AC120/60Hz;
AC220V/50Hz; AC240V/60Hz,
AC230V 50/60Hz; AC36V 50/60Hz;
AC24V 50/60Hz;DC24V;DC12V ±10%

Flow as the arrow, mounts in any position;
best position is upright direction



External Dimensions

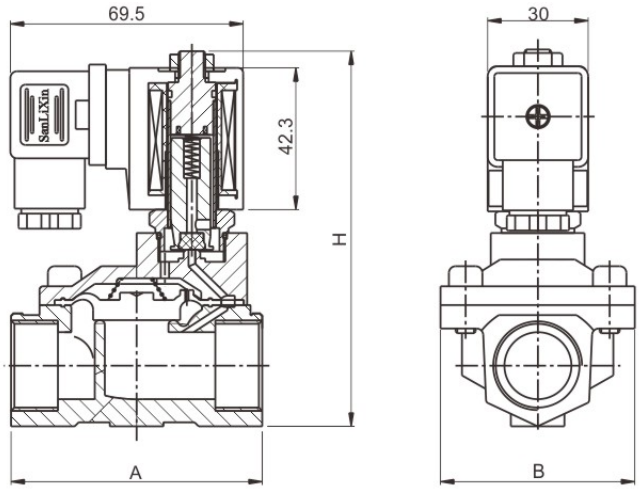

Valve Selection List

Pipe Conn -ection	Orifice mm	CV Factor	Operating pressure differential(BAR) Min.	Max. Air	Max. Liquids	Max. Fluids Temp.	Coil Type	Power consumption VA AC 220V	Power consumption W DC 24V	Coil Class	External Dimensions Length x Width x Height A x B x H	Model Code 220VAC	Weight (KG)
3/8 "	13	4.5	7.5	10	10	120	D	22	13	F	66x48x107	WSLP1DF02E1C13	0.8
1/2 "	13	4.5	7.5	10	10	120	D	22	13	F	66x48x107	WSLP1DF02E1D13	0.7
3/4 "	20	7.6	7.5	10	10	120	D	22	13	F	75x58x112	WSLP1DF02E1E20	0.9
1 "	20	7.6	7.5	10	10	120	D	22	13	F	81x58x119	WSLP1DF02E1G20	1.1
	25	12	7.5	10	10	120	D	22	13	F	96x70x131	WSLP1DF02E1G25	1.4

三力信 Sanlixin®

SOLENOID VALVE

Sales Center in Indonesia

三力信 Sanlixin® Sanlixin Indonesia

www.solenoidvalve.cn

Lindeteves Trade Center
- LTC lantai GF2 Blok A23 No 9 JL.Hayam Wuruk No.127 Jakarta Barat
Tel:0062 2156983081
Fax:0062 2156983082
Email: benny@solenoidvalve. cn

VIET GARDEN COMPANY

三力信 Sanlixin® Sanlixin Vietnam

www.solenoidvalve.vn

205 Dao Duy Tu St., Dist.10, HCMC, Vietnam
Contact: Nguyen Van Huan
Mobile: 0084-918 099 856
Tel: 0084-8-3957 4060 Ext.112
Fax: 0084-8-3957 4059
Email: info@solenoidvalve. vn

Sales Center in Malaysia

三力信 Sanlixin® Sanlixin Malaysia

www.solenoidvalve.cn

SPLT Consult Re Engrg Svcs Sdn Bhd
38, Jalan Sutera Merah 2, Taman Sutera.
81200 Johor Bahru, Johor DT, Malaysia.
Tel:+607-235 7739 / +6016-733 4120
Fax:+607-241 6268
Email: lenst@solenoidvalve. cn

Sales Center in Spain

三力信 Sanlixin® Sanlixin Spain

www.solenoidvalve.cn

C/Marqués del Turia, 48 Paiporta
46200 Valencia-Spain
Tel. +34 722 327 973.
Carlos Vicente to Representaciones Tecnicas
Email: carlos@solenoidvalve.cn

Sales Center in Mexico

三力信 Sanlixin® Sanlixin Mexico

www.solenoidvalve.cn

Cipres 280 Street, Orange Building
406, Colonia Atalmpa, Municipality Cuahutemoc,
Cp. 06450, City Of Mexico, Mexico Country.
Mobile Phone: +52 5564765558.
Office Phone: 01 52 5562851881
Ing. Jesus Soberanes Perez
soberanesjesus@solenoidvalve.cn

Sales Center in UK

三力信 Sanlixin® Sanlixin UK

www.aircoproducts.co.uk

AIRCO PRODUCTS LIMITED
Unit 10 Stafford Park 12
Telford
Shropshire
TF3 3BJ
Telephone: 01952 200120
Email: sales@aircoproducts.co.uk

Sales Center in USA

G C VALVES GC VALVES A DEMA COMPANY

www.gcvalves.com

America General Agent: GC VALVES
456 Crompton Street Charlotte,
NC 28273
Ph. 704-588-3300
Fx .704-973-9526
Office 800-828-0484

Sales Center in France

ELV solenoid valve
Technologies.eicomposants the.miques

www.cbm.fr

3 Rue Jules Verne
Parc d' Activités Airspace33187 LE HAILLAN Cedex
Tél. 33 (0)5 56 08 62 59
Fax. 33 (0)5 56 42 58 15
info@cbm.fr

Sales Center in Poland

A+ TECH

www.aplustech.pl

A+ TECH Sp. z o.o.
ul. Warzelnicza 27A,
03-255 Warsaw,
Poland
Tel./Fax.+48 22 811 5080
Mobile. +48 602 862 125
+48 694 082 868
E-mail.biuro@aplustech.pl

YUYAO SANLIXIN SOLENOID VALVE CO.,LTD.

Add: No.59 Fangye Road, Yangming Sub-district, Yuyao , Zhejiang , China
Tel： + 86 - 574 - 62640822 62636060 62559181
Fax：+ 86 - 574 - 62636060 P.C.：315400
Http: // www.solenoidvalve.cn
E-mail: sanlixin@solenoidvalve.cn